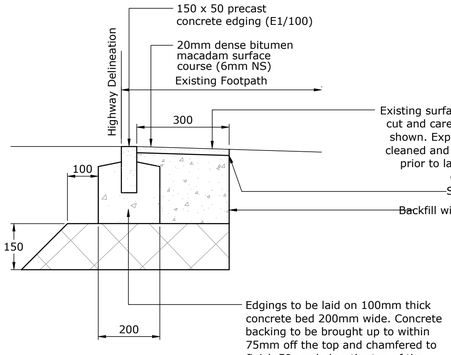

FOOTWAY DETAIL

1:10

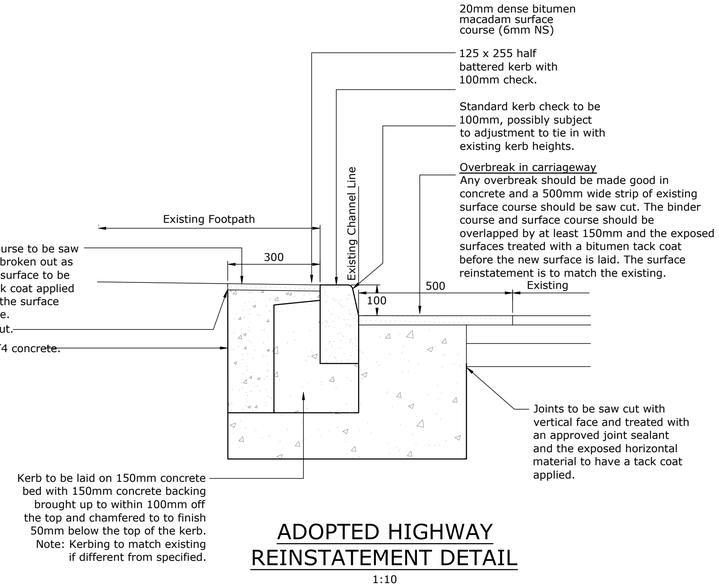

ADOPTED HIGHWAY REINSTATEMENT DETAIL

1:10

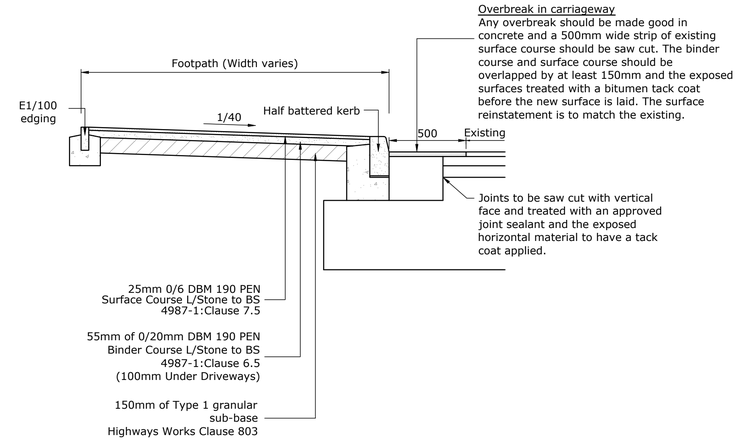

TYIPICAL CONSTRUCTION DETAIL KERB REINSTATEMENT LANCASTER STREET

1:20

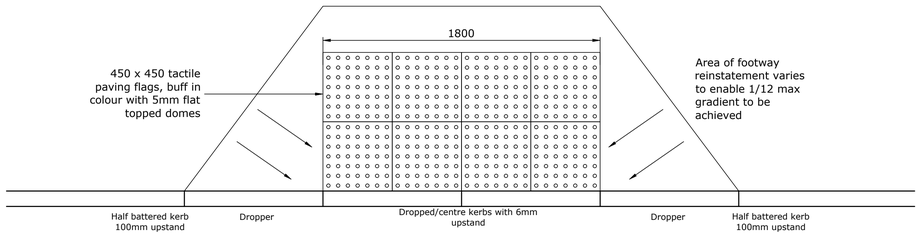

TYPICAL TACTILE PAVING DETAIL

1:20

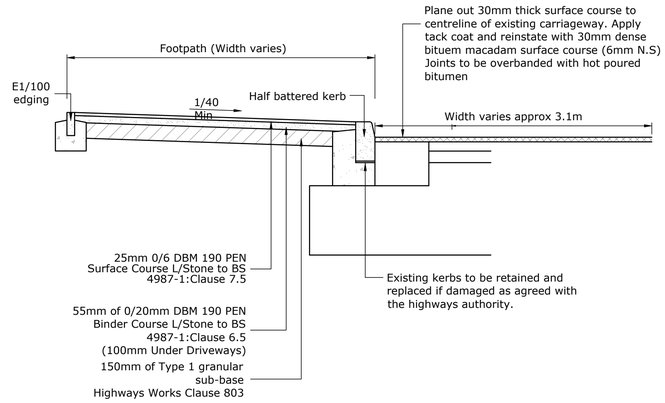

TYPICAL CONSTRUCTION DETAIL PLANE & RESURFACE CROMWELL STREET

1:20

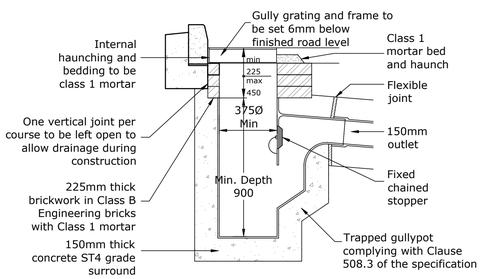

TYPICAL ROAD GULLY DETAIL

1:20

Gully gratings and frames shall comply with the requirements of BS EN124, Class D400, manufactured in ductile iron.
Pedestrian covers are to be used on shared surface streets.

Grating and frame shall be single piece with an anti theft captive hinge and shall be hinged to close with the direction of traffic flow.

Gratings shall have 100mm deep frame.

Gratings and frames shall be coated with black bitumen.

Minimum clear opening between gully pot and gully frame to be 370mmØ x 430mm in any direction. Trapped gully pot manufactured in pre-cast concrete.

Gully grating and frame must be located centrally over the gully pot

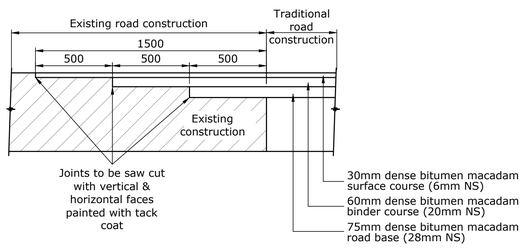

CARRIAGEWAY TIE-IN DETAIL

1:20

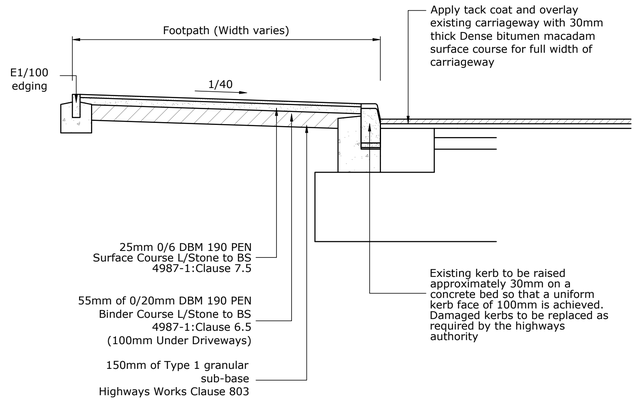

TYPICAL CONSTRUCTION DETAIL OVERLAY BRUNSWICK STREET

1:20

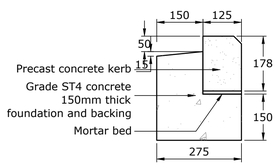

HALF BATTERED DROPPED KERB

1:10

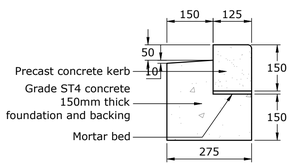

BULLNOSE KERB (DROPPED CROSSINGS)

1:10

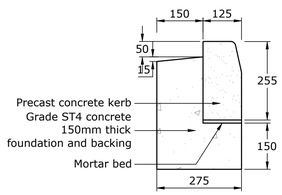

HALF BATTERED KERB

1:10

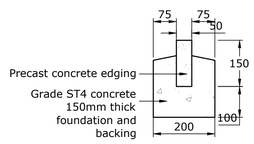

E1/100 EDGING

1:10

Health and Safety Notes/CDM Regulations 2015

In line with the above regulations we are obliged to inform the Contractor of the abnormal risks that may be encountered in the construction of these works. As part of the design process all the salient health & safety aspects are given full consideration and these are observed within the designs viewed on this document. Although considerable effort is undertaken to eliminate risks, the very nature of the project gives rise to some hazards and risks.

Significant risks that cannot be eliminated by design and could not be foreseen by a competent contractor are noted in the risk assessment boxes on the drawings.

Notes

1. All highway works to be constructed in accordance with the South Yorkshire Design Guide and any specific requirements of Barnsley MBC.
2. All highway works are to be the subject of a Section 38 Agreement of the Highways Act 1980.
3. All public sewers to comply with the requirements of the Water Research Councils publication "Sewers For Adoption - 6th edition" together with any additional specific requirements of the Drainage Authority.
4. All public sewers are to be the subject of a Section 104 Agreement of the Water Industry Act 1991.
5. This drawing to be read in conjunction with:-

   Private Drainage Layout, External Works Layout and the Drainage Details.

Rev	Description	By	Date

Client:

Keepmoat Homes

Project Title:

Brunswick Street, Thurnscoe

Drawing Title:

Highway Construction Details

Scale	Date
As Shown @ A1	19.08.19

Drawing No	Revision	Status
5022-C-D3-01	0	Approval

iD Civils Design Consulting Engineers
Geo Structures Civils

North East & Yorkshire:
Aske Stables, Aske, Richmond, North Yorkshire, DL10 5HG
t: 01748 889015
f: 01565 740263

North West & Midlands:
Caledonian House, Tatton Street, Knutsford, Cheshire, WA16 6AG
t: 01565 755557
f: 01565 740263