

Energy saving options with EFF1 motors. All fans are tested to the latest internationally recognised standard IS05801 Part 1 (1997), installation category D (AMCA approved) for aerodynamic performance and BS848 Part 2 (1985) for acoustic performance. Coupled with the above fan diameters, the adjustable pitch Aerofoil impeller gives the exact performance required, with a non overloading fan characteristic.

e3 line A range of axial flow fans are compatible with the FWX range of inverter drives – thereby offering a complete energy package

JM Aerofoil

Axial Flow Fans

Applications

- General ventilation and extraction
- Cooling and refrigeration
- Electro-mechanical cooling
- Environmental control - crop storage
- Petrochemical process ventilation
- Emergency ventilation options up to 400°C/2 hours
- Pressure testing

General information

- 315-1600 mm ∅
- 65 m^3/s
- Static pressure up to 1900 Pa
- Energy saving options with EFF1 motors
- Compatible with FWX range of Inverter drives
- New Twist Wing option available (enquire for more information)
- 800mm up to 2900 rpm; 1400mm up to 1450 rpm and 1600mm up to 960 rpm
- Fully adjustable die cast aluminium impellers; X-ray inspection
- Designed to accept the new IEC 60034-30 International Standard IE2 - IE3 standard
- Long and short mild steel casing variants - hot dipped galvanised after manufacture or stainless steel
- Tested to ISO 5801
- Motor protection IP55

- High energy efficiency - AMCA Certified
- Low installed noise levels
- Multiple blade configurations for optimum performance to duty
- Multi-stage available for higher pressure development
- Bifurcated variants for continuous operation up to 200°C
- Explosion proof options in accordance with ATEX directive

Range key details

JM Axial fans

For general air movement and special applications.

Including options for:

- Emergency high temperature smoke extraction *(see page 8)*
- ATEX environments
- Pressurisation

Standard features

- All fans are certified to ISO 5801
- CE marking
- X-ray inspection of all cast impeller parts
- EFF2 motor as standard
- High energy efficiency: reduced SFP
- Motor protection IP55
- Non-overloading
- Adjustable pitch impeller for exact performance required
- Low installed noise levels
- High temperature capability: up to 200°C for 2 hours for three-phase fans only

Range options

- Long and short casings
- Multiple blade configurations
- Inverter: speed controllable
- Explosion proof/ATEX compliant versions
- Higher temperature operation capability: tested to BS EN 12101-3
- EFF1 motors for extra efficiency

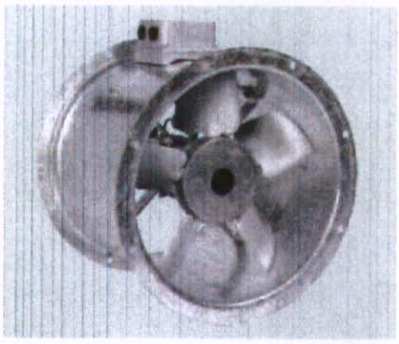

JM Aerofoil

- Sizes: 315mm to 1600mm Ø
- Volume flow: up to 65m³/s
- Static pressure: up to 1900 Pa
- Operating temperature range: -20°C to +50°C
- Role: General ventilation and/or extraction

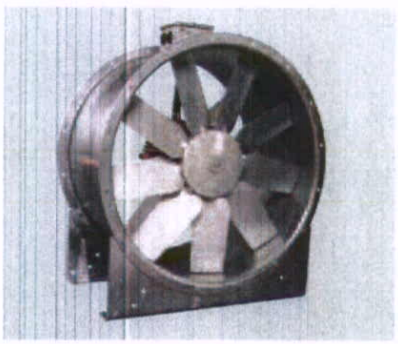

JM High Temperature Aerofoil

- Sizes: 315mm to 2500mm Ø
- Volume flow: up to 150m³/s
- Static pressure: up to 1900 Pa
- High temperature capability: up to 400°C for 2 hours
- Role: Emergency ventilation/ hot fire smoke extraction

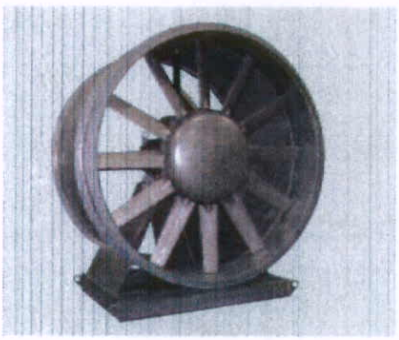

Large JM Aerofoil

- Sizes: up to 4000mm Ø
- Volume flow: up to 425m³/s
- Static pressure: up to 3400 Pa
- High temperature capability:
  - up to 250°C for 2 hours
  - options up to 400°C for 2 hours
- Role: Heavy duty industrial and infrastructure applications – higher pressure/volume
- Option: Fully-reversible flow

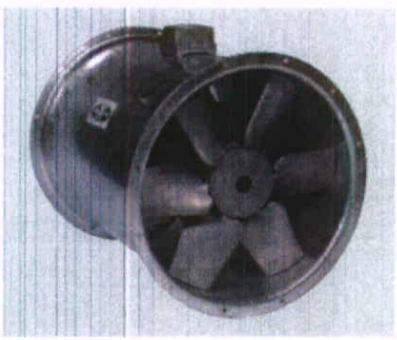

JM MaXfan and MaXfan Plus Aerofoil

- Sizes: 400mm to 630mm Ø
- Volume flow: up to 7.2m³/s
- Static pressure: up to 1100 Pa
- Operating temperature range: -20°C to +50°C
- Role: High pressure kitchen extract
- Options: Single-phase or three-phase

Range overview

Fans summary – introducing the right choice

	Box Fans								Plate Fan
	MiniBox	SingleBox	TwinBox	PowerBox	Axcent 3	MPS	Copford	Mini AHU	JMP
Applications									
Fire safety & life systems									
Catering	●	●	●	●	●	●	●		●
Education: schools/universities	●	●	●	●	●	●	●	●	●
Healthcare	●	●	●	●	●	●	●	●	●
Industrial									●
Leisure: venues/stadiums	●	●	●	●	●	●	●	●	●
Offices	●	●	●	●	●	●	●	●	●
Retail: malls/supermarkets	●	●	●	●	●	●	●	●	●
Residential: hotels/apartments	●	●	●	●	●	●	●	●	●
Placement									
Internal mounting	●	●	●	●	●	●	●	●	●
External mounting		○	○	○	○	○	●	○	●
Low profile (ceiling void)	●	●	●					●	
Functions									
Stairwell pressurisation									
Smoke extract (inc. loading bays)									
General extract	●	●	●	●	●	●	●	●	●
Toilet extract			●				●		
Kitchen hood extract				●	●	●			●
Demand control ventilation (fan controls)	●	●	●	●	●		●		
Required Features									
Compact design	●	●	●					●	●
Energy efficient	●	●	●	●	●	●	●	●	●
Speed controllable	●	●	●	●	●	●	●	●	●
For use with *iFan* controls	●	●	●	●	●		●		
Low noise	●	●	●	●	●	●	●	●	
ATEX/hazard zone compliant									○
Key Specifications									
Sizes (mm dia.)	100-315	125-500	125-400	400-560	200-760	250-400	Rectangular spigot	Rectangular spigot	315-630
Max air flow (m³/s)	0.4	1.66	0.74	2.9	8.4	2	DD: 1.88 BD: 8.65	1.09	4.08
Max static pressure (Pa)	725	510	370	800	900	1100	DD: 590 BD: 780	800	175
Max operating temperature	Up to 60°C	Up to 60°C	Up to 70°C	Up to 55°C	Up to 50°C	Up to 80°C	Up to 40°C	Up to 40°C	Up to 50°C

○ ***Product available but variant only.***

DD = Direct drive BD = Belt drive

Note: *This table is* ***not*** *comprehensive: it is provided only as a selected introduction to the comprehensive Fläkt Woods range of Fans and their applications. For additional options, visit www.flaktwoods.co.uk Larger sizes are available, please enquire for further details.*

Cased Fans							Roof Units			Specialist	
JM Aerofoil	JM High Temp	JM Bifurcated	Bifurcated Series 33	JM Multi-stage	Tube Fans (ILC)	MaXfan	DSP	DSM	DSC	ATEX Fans	*iFans*
●	●	●	●	●		●				○	
●	●	●	●	●	●	●	●	●	●	○	●
●	●	●	●	●	●	●	●	●	●	○	●
●	●	●	●	●	●	●	●	●	●	○	●
●	●	●	●	●			●	●	●	○	●
●	●	●	●	●	●	●	●	●	●	○	●
●	●	●	●	●	●	●	●	●	●	○	●
●	●	●	●	●	●		●	●	●	○	●
●	●	●	●	●	●	●	●	●	●	○	●
●	●	●	●	●	●	●				○	●
●	●	●	●	●	●		●	●	●	○	●
●	●	●	●	●	●	●				○	●
●	●					●					
●	●	●	●	●							
●	●	●	●	●	●	●	●	●	●		●
											●
●	●	●	●	●		●	●	●	●		●
●	●	●	●			●					●
●	●	●	●		●	●	●	●	●	○	●
●	●	●	●	●	●	●	●	●	●	○	●
●	●	●	●	●	●	●	●	●	●	○	●
●	●	●	●		●	●					●
●	●	●	●		●	●	●	●	●	○	●
○				○						○	
315-1600	315-1600	400-1000	152-305	315-1000	100-315	400-630	315-700	200-760	200-760	315-1600	100-1000
65	65	20	0.89	31.6	0.46	7.2	3	9.2	10.5	65	19
1900	1900	1000	380	2000	700	1100	140	1000	1050	2000	800
Up to 200°C	Up to 400°C	Up to 200°C	Up to 200°C	Up to 200°C	Up to 80°C	Up to 50°C	Up to 50°C	Up to 50°C	Up to 50°C	Up to 60°C	Up to 200°C

On-line selection tool: *To help identify the right solution, see Fläkt Woods Fan Selector software at http://fanselector.flaktwoods.com This web-based selection tool can quickly point to the right answer to your specific project requirements.*

Also available: *Enhanced CD/Desktop version for stand-alone, off-line working on your own computer – especially if you need more functionality and performance while mobile. Designed to receive "WebUpdate" delivery of our latest product solutions. For more information email fan.selector@flaktwoods.com*

Standards & approvals

Compliance and certification

As standards become more challenging, and regulations get tighter, you can rely on Fläkt Woods to help you ensure compliance.

Standards

Including:

General

- BS 848: Part 2:1985
  Fans for general purposes. Methods of noise testing
- DIN 45635-38/56:1986
  Method of noise testing
- ISO 5801: Part 1:2007
  Industrial fans. Performance testing using standardized airway
- DIN 24163:1985
  Method of air performance testing
- ISO 12499:1999
  Industrial fans — Mechanical safety of fans — Guarding

Fire safety

- BS EN ISO 12101: Part 3:2002
  Smoke and heat control systems. Specification for powered smoke and heat exhaust ventilators (Replacing BS 7346: Part 2)
- ISO 21927: Part 3:2006
  Smoke and heat control systems. Specification for powered smoke and heat exhaust ventilators
- BS 7346: Part 7:2006
  Components for smoke and heat control systems. Code of practice on functional recommendations and calculation methods for smoke and heat control systems for covered car parks

Fan types	Standards compliance							
	ISO 5801	DIN 24163	BS 848-2	DIN 45635	ISO 21927-3	EN 12101-3	AMCA	Parts F&L*
JM Aerofoil	•		•				•	•
JM High Temp	•		•		•	•	•	•
JM Bifurcated	•		•				•	
JM Multi-stage	•		•				•	•
Large JM	•							•
MaXfan	•		•					•
Box fans		•		•				
Centrifugal fans	•							
Plate fans		•		•				
Tube fans		•		•				
Roof units	•							•
ATEX fans	•		•				•	
Intelligent fans	•	•	•	•			•	•

Building regulations

Fan types	Features				
	ATEX Options	X-rayed Moving Parts	IP55	Low Noise	Standby Option
JM Aerofoil	•	•	•	•	•
JM High Temp		•	•	•	•
JM Bifurcated		•	•	•	•
JM Multi-stage	•	•	•	•	
Large JM		•	•		
MaXfan		•	•	•	
Box fans				•	•
Centrifugal fans	•		•	•	•
Plate fans			•	•	
Tube fans				•	
Roof units			•	•	
JM ATEX fans	•	•	•	•	

Regulations

Including:

- Building Regulations: Part F
  Ventilation
- Building Regulations: Part L
  Conservation of fuel and power

Certifications

Including:

- EU ATEX Directive:
  Certificate No. ST M07 TEC 2885 covering ATEX-compliant options
- BSRIA-tested
  JM High Temperature Fans
- Air Movement and Control Association (AMCA) certified
  JM ranges

Further information and guidance

Whatever the size of your planned air management systems installation, you can be sure that, at Fläkt Woods, we're always ready to help.

To supply expert advice, information and guidance.

And to ensure selection and specification of an integrated system that exactly matches the detailed needs of each building.

We're also equipped to provide the best possible support throughout the operational service life of each installed system.

About other Fläkt Woods systems

Fans are just one part of our comprehensive solutions for your air management needs.

To get the bigger picture, you can request introductory literature for our other air management systems:

- Air Handling Units
- Chillers
- Chilled Beams

Selection and specification advice

If you'd welcome expert assistance with design, selection and system specification, the Fläkt Woods Sales Team can be contacted on:

01206 222555 or

email info.uk@flaktwoods.com

Upgrades and system monitoring

If you're looking to upgrade or refurbish an existing installation, Fläkt Woods Technical Site Services Team are the experts. They can also help extend operational service life, ensure legal compliance, and monitor and maintain efficient operation of your installed systems. Our brochure can tell you more.

Call 01206 222547 or

email service.uk@flaktwoods.com

Unrivalled R&D facilities

As leading pioneers in our specialist fields, Fläkt Woods has one of the world's largest networks of facilities for testing entire air climate solutions.

Our dedicated laboratory in Colchester, unique in the UK, is equipped to demonstrate and prove product performance and control strategies. We have further R&D facilities in Sweden, Finland, France and the USA.

Specific dynamic testing capabilities include measurement and study of:

- Comfort levels
- Cooling and heating outputs
- Velocity profiles
- Noise criteria

We also use advanced software tools for theoretical design, covering:

- Computational fluid dynamics (CFD)
- Product/component design
- System selection

In all, across Europe, there are 6 Fläkt Woods Technical Centres. More than 270 skilled personnel are constantly focused on maintaining technological progress, system performance and product quality.

Selection and specification advice

01206 222555

Upgrades and system monitoring

01206 222547

Cylindrical Silencers

Type B & C Silencers

Construction

Casings are of rolled, pre-galvanised sheet steel with spun end rings incorporating tapped inserts for fixing. Suitable fixing screws are provided with all steel silencers.
The absorbent material is acoustic grade mineral fibre with an erosion resistant facing. It is protected and contained by a pre-galvanised perforated steel sheet formed to match the fan diameter.

Cylindrical silencers shall be suitable for air pressures up to a maximum of 1000 Pa. For duct pressures in excess of 1000 Pa please enquire.

A Melinex Lining (variant code M) can be supplied for critically clean applications such as hospitals to ensure no fibre migration. The lining may also be used in moisture or grease laden conditions, such as kitchen extract systems where the material is used to stop the ingress of grease etc. into the acoustic media. The use of the lining also allows the silencers to be low pressure steam cleaned. Some reduction of attenuation due to the lining will be experienced.

Performances

Are derived from tests to BS848. Measurements of fan noise are made with and without the silencer in position. The difference between recorded levels is the dynamic (with airflow) attenuation or insertion loss of the silencer. Type B silencers may be directly coupled to both inlet and outlet flanges of the fan. When type C silencers are directly coupled to the fan flanges they are most effective on the outlet. A spacer duct of 1D length between the fan inlet flange and a type C silencer is necessary to ensure maximum performance. Note: C type silencers mounted close to a fan may effect the aerodynamic performance.

Size Range

Type B silencer bore diameters range from 280 mm to 2000 mm metric range, 6" to 75" imperial range in lengths equal to or twice the bore diameter (1D or 2D) 6" to 9.5" are available in 1.5 D lengths only. Pressure loss for type B silencers is the same as a plain duct.
Type C silencers have a centrally mounted absorbent pod in the airway for increased attenuation. The pressure loss due to the pod is shown on the chart below.
The diameter range is 315 mm to 2000 mm metric range or 12" to 75" imperial range.

Fume Handling

Stainless Steel, PVC or Polypropylene construction is also available for corrosive atmospheres. Please send details of the application with the enquiry.

Marine Use

The construction of standard silencers has been proved satisfactory for use below decks on ships and oil rigs and a specially strengthened design is available for other locations, please enquire.

Temperature Range

Standard silencers are suitable for temperatures from -40°C to 200°C. When moisture resistant lining is used the continuous air handling temperature is limited to 80°C. Special treatments enable silencers to operate at temperatures up to 600°C. For smoke applications, please enquire.

Finishes

Standard finish is galvanised zinc coating to BS2989 Z2. Other finishes including epoxy paint are available to special order.

Mounting

Galvanised steel mounting feet and matching flanges corresponding to those supplied for Aerofoil fans are available.

Resistance to Air Flow Type C Silencer

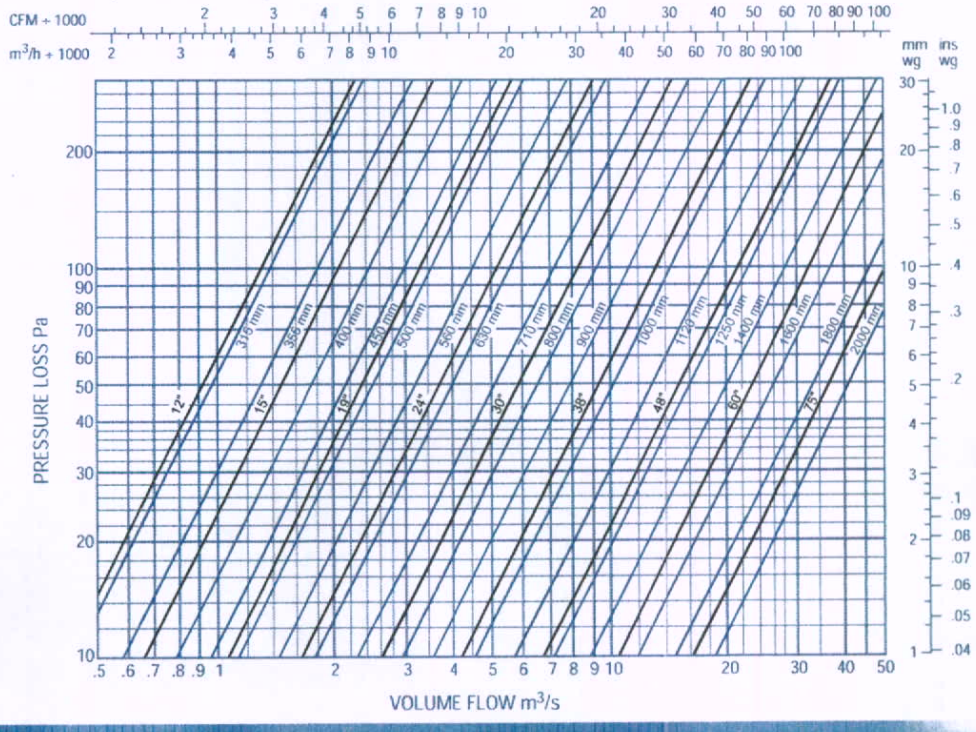

Cylindrical Silencers

Acoustic Performance

Type B Dynamic Attenuation

Imperial

Bore Dia. Ins (D)	Length	Octave-Band Mid Frequencies Hz							
		63	125	250	500	1K	2K	4K	8K
6	1.5D	0	0	1	6	12	9	10	7
7.5	1.5D	0	0	1	7	11	8	9	6
9.5	1.5D	0	0	2	7	11	7	7	6
12	1D	1	2	4	9	11	10	9	7
	2D	1	2	5	11	16	12	11	10
15	1D	2	3	5	10	13	11	9	8
	2D	3	4	7	14	18	15	11	12
19	1D	2	3	6	13	14	10	10	5
	2D	3	4	8	19	18	14	11	10
24	1D	3	5	7	15	13	8	9	8
	2D	4	6	9	19	19	14	13	12
30	1D	3	5	8	16	12	9	9	8
	2D	4	6	10	19	15	12	11	10
38	1D	4	5	11	16	11	10	8	9
	2D	4	6	13	19	13	12	11	11
48	1D	4	6	12	17	10	9	8	7
	2D	5	7	14	19	14	11	11	9
60	1D	5	7	13	16	10	8	7	6
	2D	6	8	15	18	12	10	9	7

Metric

Bore Dia. mm (D)	Length	Octave-Band Mid Frequencies Hz							
		63	125	250	500	1K	2K	4K	8K
280	1D	1	1	2	8	11	8	8	7
	2D	1	2	4	10	13	10	10	9
315	1D	1	2	4	9	11	10	9	7
	2D	1	2	5	11	16	12	11	10
355	1D	1	2	4	10	12	10	9	7
	2D	2	3	6	13	17	14	11	11
400	1D	2	3	5	10	13	11	9	8
	2D	3	4	7	14	18	15	11	12
450	1D	2	3	6	12	13	11	10	6
	2D	3	4	8	17	18	15	11	11
500	1D	2	3	6	13	14	10	10	5
	2D	3	4	8	19	18	14	11	10
560	1D	2	4	7	14	14	9	10	7
	2D	3	5	9	19	18	14	12	11
630	1D	2	5	7	15	13	8	9	8
	2D	4	6	9	19	19	14	13	12
710	1D	3	5	7	15	13	9	9	8
	2D	4	6	9	19	17	13	12	11
800	1D	3	5	8	16	12	9	9	8
	2D	4	6	10	19	15	12	11	10
900	1D	3	5	10	17	13	11	10	8
	2D	4	6	12	19	15	12	11	10
1000	1D	4	5	11	16	11	10	8	9
	2D	4	6	13	19	14	12	11	11
1120	1D	4	5	11	17	11	9	8	8
	2D	4	6	13	19	14	12	11	8
1250	1D	4	6	12	17	10	9	8	7
	2D	4	6	14	19	14	11	11	9
1400	1D	4	6	12	16	10	8	7	6
	2D	4	7	14	18	13	10	10	8
1600	1D	4	7	12	16	10	8	7	6
	2D	4	8	15	18	12	10	9	7

Type C Dynamic Attenuation

Imperial

Bore Dia. Ins (D)	Length	Octave-Band Mid Frequencies Hz							
		63	125	250	500	1K	2K	4K	8K
12	1D	2	5	5	9	18	20	18	15
	2D	2	6	6	12	20	25	20	17
15	1D	2	6	6	10	19	24	20	17
	2D	3	7	8	14	29	29	23	18
19	1D	2	3	8	16	21	22	21	17
	2D	2	4	10	20	29	30	26	20
24	1D	3	5	8	16	19	14	16	12
	2D	5	6	10	19	29	25	21	20
30	1D	4	5	8	16	19	15	14	13
	2D	5	7	10	20	23	21	17	14
38	1D	5	5	11	18	19	14	14	14
	2D	5	6	13	26	24	20	18	16
48	1D	5	8	12	19	17	14	12	10
	2D	5	8	14	25	23	17	17	12
60	1D	5	8	13	17	16	13	11	8
	2D	6	10	17	21	20	17	14	9

Metric

Bore Dia. mm (D)	Length	Octave-Band Mid Frequencies Hz							
		63	125	250	500	1K	2K	4K	8K
315	1D	2	5	5	9	18	20	18	15
	2D	2	6	6	12	20	25	20	17
355	1D	2	5	6	9	18	22	19	16
	2D	2	6	7	13	25	27	21	17
400	1D	2	6	6	10	19	24	20	17
	2D	3	7	8	14	29	29	23	18
450	1D	2	4	7	13	20	23	22	17
	2D	2	5	9	16	29	29	21	20
500	1D	2	3	8	16	21	22	21	17
	2D	2	4	10	20	29	30	20	26
560	1D	3	5	8	16	20	18	19	15
	2D	4	5	10	20	29	28	21	23
630	1D	3	5	8	15	19	16	14	12
	2D	5	6	10	19	29	25	21	20
710	1D	3	5	8	15	19	15	14	12
	2D	5	6	10	20	26	23	18	17
800	1D	4	5	8	16	19	15	14	13
	2D	5	7	11	22	23	21	16	14
900	1D	4	5	9	17	19	15	14	13
	2D	5	7	12	24	23	21	16	15
1000	1D	5	5	11	18	19	15	14	13
	2D	5	7	13	26	24	20	16	16
1120	1D	5	7	11	19	18	14	13	12
	2D	5	8	13	25	23	18	16	13
1250	1D	5	8	12	19	17	14	12	10
	2D	5	8	14	25	17	17	17	12
1400	1D	5	8	12	18	16	13	11	9
	2D	5	9	15	23	22	17	15	10
1600	1D	5	8	13	17	16	13	11	8
	2D	6	10	17	21	20	17	14	9

For sizes above 60" or 1600 mm please enquire.

All performances are derived from tests to BS848.
For increased attenuation use Woods splitter silencers. Attenuation figures shown are typical in-situ Dynamic Performances. For critical applications, particularly high performance fan systems please consult Woods Acoustic Department.

Cylindrical Silencers

Dimensions & Weights

Imperial

Ins.	Imperial - Dimensions (mm)								Weight kg			
Size (D)	OD	No of Holes	PCD	Thread	Mounting Foot Holes		A Length		B		C	
					Dia	Spacing	1D	2D	1D	2D	1D	2D
6	210	4	184	M6	7	130	229*		2.7*		-	
7.5	248	4	216	M6	7	152	286*		3.6*		-	
9.5	298	4	273	M8	9	194	362*		5.0*		-	
12	416	8	349	M8	11	273	305	610	10	16	12	18
15	492	8	425	M10	11	343	381	762	13	22	16	26
19	645	8	541	M12	11	438	483	965	24	39	28	46
24	773	12	668	M12	11	559	610	1219	34	57	39	67
30	926	12	821	M12	14	711	762	1524	51	87	60	102
38	1181	16	1035	M16	14	914	965	1930	79	149	94	172
48	1450	20	1289	M16	14	1143	1219	2540	114	239	133	278
60	1749	12	1626	M16	14	1422	1524	3150	250	529	282	563

Metric

mm	Metric (mm)								Weight kg			
Size (D)	OD	No of Holes	PCD	Thread	Mounting Foot Holes		A Length		B		C	
					Dia	Spacing	1D	2D	1D	2D	1D	2D
280	385	4	320	M8	10	230	280	560	9	14	-	-
315	415	8	355	M8	10	265	315	630	10	17	13	19
355	455	8	395	M8	10	305	355	710	12	20	15	24
400	500	8	450	M10	10	350	400	800	15	25	18	30
450	600	8	500	M10	10	400	450	900	20	33	24	39
500	650	12	560	M10	10	450	500	1000	25	41	29	48
560	710	12	620	M10	10	510	560	1120	30	50	35	58
630	780	12	690	M10	12	580	630	1260	35	61	42	72
710	860	16	770	M10	10	660	710	1420	44	76	53	90
800	1000	16	860	M10	12	750	800	1600	55	96	66	116
900	1100	16	970	M12	12	850	900	1800	70	129	84	150
1000	1200	16	1070	M12	12	950	1000	2000	82	157	100	182
1120	1320	20	1190	M12	16	1070	1120	2342	100	211	118	247
1250	1450	20	1320	M12	16	1150	1250	2602	127	266	147	306
1400	1600	20	1470	M12	16	1300	1400	2902	199	399	220	453
1600	1800	24	1680	M16	16	1500	1600	3302	311	637	362	739

Notes:

1. 6" - 9.5" are 1.5D long
2. For larger sizes please enquire

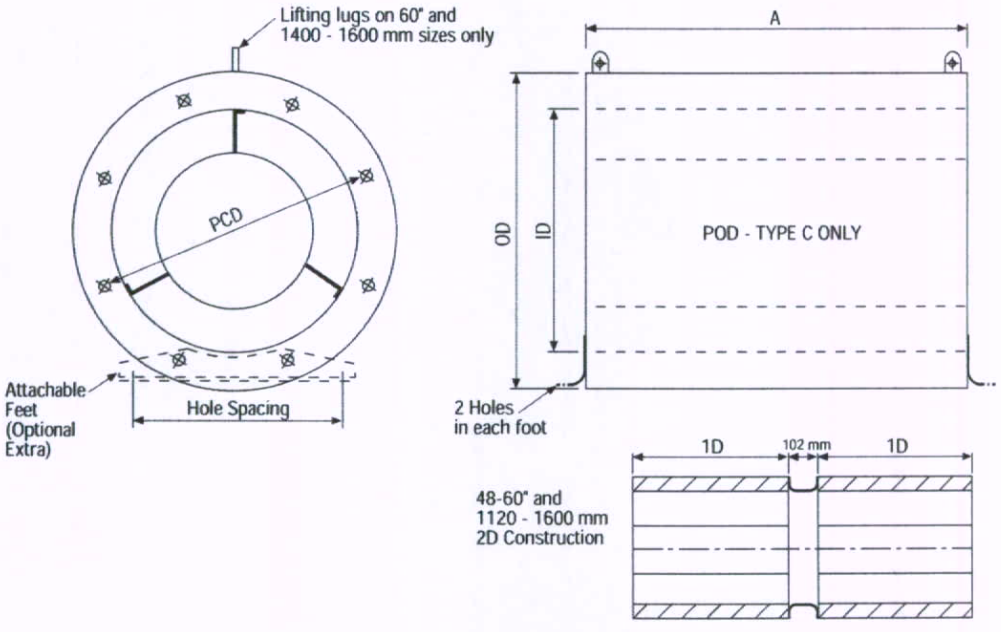

Packing Specification

Protective Boards screwed to ends.
Packed length is Silencer length plus 50 mm.
Packed width and height ≏ Silencer O.D.

Alternative crated packing

(at extra cost)
Typically:
Packed length is Silencer length plus 150 mm.
Packed section is square.
Side dimension is Silencer O.D. plus 200 mm.