# Above ground oil storage tanks: GPP 2

**These guidelines are produced by Natural Resources Wales, the Northern Ireland Environment Agency, the Scottish Environment Protection Agency, the Energy Institute and the Oil Care Campaign. Contact details are available at the end of this document.**

**Guidance for Pollution Prevention (GPPs) are based on relevant legislation and reflect current good practice. Following these notes will help you manage your environmental responsibilities to prevent pollution and comply with the law. If you cause pollution or allow it to occur, you may be committing a criminal offence.**

**For Northern Ireland, Scotland and Wales, this document provides guidance on environmental legislation. These guidelines are not endorsed by the Environment Agency as regulatory guidance in England. For guidance on environmental regulations in England go to www.gov.uk**

**To find the relevant regulations visit www.legislation.gov.uk**

This Guidance for Pollution Prevention is written for anyone who:

- intends to install or replace above ground oil storage tanks
- has existing oil storage tanks on their site to help look after their oil safely.

Following these notes will help look after your above ground oil storage tanks safely and to minimise the risk of causing pollution.

Different regulations apply in Northern Ireland, Scotland, Wales and England. This guidance describes what the regulations do and don't cover in each country.

**Acknowledgements:**

We would like to thank the following organisations for their valued assistance in producing these guidelines.

The Energy Institute: https://www.energyinst.org/home

The Oil Care Campaign: http://oilcare.org.uk/

## Contents

1. Introduction ....3
2. Get insurance ....3
3. Oil storage checklist ....4
4. The Regulations and what they apply to. ....5
4.a Oil Storage Regulations ....5
Northern Ireland ....5
Scotland....5
Wales....6
England....7
4.b Building Regulations ....7
5. Deciding where to put your tank ....8
5.a Avoid environmental high risk locations....8
5.b Avoid storing oil in areas at risk from flooding ....9
6. Oil storage tanks ....9
6.a Manufacturing and Quality Standards ....9
6.b Types of oil storage tank ....10
6.c Secondary Containment (also known as bunds) ....13
6.d Secondary containment capacity....14
7. Installing tanks ....14
8. Ancillary equipment ....15
8.a Measuring tank contents ....16
9. Pipework ....16
9.a Vent pipe ....17
9.b Fill point ....18
9.c Pipework to take oil from your tank (draw-off or supply pipe) ....19
9.d Flexible delivery pipes....19
9.e Taps and valves ....20
9.f Underground pipework ....20
9.g Overfill prevention devices ....20
10. Safe deliveries to your tank ....21
11. Check legal compliance for your existing tanks ....22
12. Looking after your tank....22
Maintenance ....22

What you should do with your old tank .....23
13. Mobile bowsers.....24
14. Security .....24
15. Oil spills .....24
16. References .....26
Other useful sources of information:.....28
Useful websites:.....28
Professional schemes for competent persons:.....29
Appendix A Checklist for oil storage tanks.....30
Appendix B - Calculation of capacity for tanks in open secondary containment systems .....33
Contact details .....34

## 1. Introduction

The pollution prevention principles below are specifically written to help people who are responsible for small or medium sized commercial oil storage or domestic oil tanks, however they apply to all above ground oil storage, including agricultural oil storage. We refer to legislation that you must follow.

For information and guidance on other types of storage please see References 1 to 5 (Section 16). This covers:

- underground oil storage
- drums
- intermediate bulk containers
- large industrial oil tanks.
- tank farms
- forecourt oil storage
- storage for dispensing into vehicles

By following these notes you will reduce the risk of pollution caused by the poor storage of oil in above ground tank installations, poorly maintained tanks and unsuitable filling practices. These notes will help you choose the correct tank for your needs. You will also reduce your risk of financial loss from lost product and clean-up costs.

## 2. Get insurance

Oil is among the most common pollutants in the UK. Cleaning up oil spills can be difficult and expensive. Dealing with a spill will cause you and maybe your neighbours a great deal of inconvenience. Make sure you have adequate insurance cover which does not just cover the cost of replacing the lost oil, and if needed your oil storage tank. Your policy should include:

- environmental clean-up for accidental oil loss, or deliberate oil loss through vandalism
- a high enough liability limit to cover you if neighbouring land, premises and/or boreholes are affected
- the costs of cleaning up oil on your own property.

## 3. Oil storage checklist

| | |
|---|---|
| Do the Oil Storage Regulations apply to your oil storage? | See section 4<br>Completed ☐ |
| Where is the best place to put a new or replacement tank? | See section 5<br>Completed ☐ |
| Get the right oil storage tank for your needs. Make sure it is installed correctly | See sections 6 & 7<br>Completed ☐ |
| Make sure you have all the correct ancillary equipment in place (pipework, vents, fill point etc) | See sections 8 & 9<br>Completed ☐ |
| Make sure deliveries are supervised by trained staff | See section 10<br>Completed ☐ |
| Make sure all existing tanks comply with the regulations | See section 11<br>Completed ☐ |
| Look after your tanks and follow manufacturer's instructions | See section 12<br>Completed ☐ |
| Do you use mobile bowsers? | See section 13<br>Completed ☐ |
| Make sure your oil storage is secure | See section 14<br>Completed ☐ |
| Have a procedure in place to deal with spills | See section 15<br>Completed ☐ |

## 4. The Regulations and what they apply to.

Across the UK, if you pollute the water environment it is very likely you are committing an offence. **Throughout this guidance, we've highlighted text indicating areas that must be complied with under the regulations that deal with oil storage in Northern Ireland, Scotland, Wales and England.** Where the regulations differ we've included information about the regulations for each country. Where the term 'must' is used, this refers to your legal requirement under these Regulations where they apply.

### 4.a Oil Storage Regulations

#### Northern Ireland

- The Control of Pollution (Oil Storage) Regulations (Northern Ireland) 2010

In Northern Ireland, 'oil' means any kind of oil and includes petrol, diesel, waste, vegetable and plant oils; but doesn't include uncut bitumen. The regulations apply to all premises that are not wholly or primarily a private dwelling, that is industrial, commercial, institutional and public body sites storing oil in containers over 200 litres, including drums and IBCs, and to domestic premises storing heating oil in a tank with a capacity of 3500 litres or more.

The regulations apply to:

- **Above ground oil storage in containers over 200 litres.**
- **Private domestic oil tanks over 3,500 litres.**
- **Waste oil storage.**
- **Oil stored in buildings - see Section 7.**

The regulations don't apply to:

- Oil stored on farms for agricultural use, where the Silage, Slurry and Agricultural Fuel Oil (SSAFO) Regulations apply - see References 6 and 8.
- Oil stored on premises regulated under the Control of Major Accident Hazards Regulations (Northern Ireland) 2015 where the container is 2500 tonnes or more.
- Oil stored wholly underground.

#### Scotland

- The Water Environment (Miscellaneous) (Scotland) Regulations 2017

In Scotland, the regulations apply to any kind of oil including petrol, diesel, mineral oil, heating oil, lubricating oil, agricultural fuel oil, waste oil and vegetable and plant oils. They don't include uncut bitumen. They apply to the storage of any volume of oil, except private dwellings storing oil in a container with a capacity of 2,500 litres of oil or less.

The regulations apply to:

- **All above ground oil storage (except domestic oil tanks of 2500 litres or less).**
- **Portable containers of less than 200 litres***
- **Waste oil storage** - see GPP8, Reference 8
- **Oil stored on farms** - see Reference 6
- **Oil stored in buildings - see Section 7.**
- **Oil distribution depots for onward distribution to other places.**

* Portable containers with a storage capacity under 200 litres don't have to comply with the more prescriptive requirements of the Oil Storage Regulations (OSR) Scotland, such as secondary containment, which apply to the remainder of the list above. They must however be strong enough not to leak in ordinary use.

The regulations don't apply to:

- Oil stored in accordance with Pollution Prevention and Control (PPC) Part A permits.
- Oil stored wholly underground, unless it's in a building.
- Oil stored in vehicles.

### Wales

- The Control of Pollution (Oil Storage) (Wales) Regulations 2016

In Wales, oils covered by these regulations include: petrol, diesel, vegetable, synthetic, waste and mineral oils. They do not apply to uncut bitumen. They apply to most industrial, commercial, institutional, agricultural and domestic sites storing oil in containers over 200 litres.

The regulations apply to:

- **Above ground oil storage in containers over 200 litres**
- **Waste Oil Storage** - see GPP8, Reference 7
- **Oil Stored in buildings- see Section 7.**

The regulations don't apply to:

- Oil stored wholly underground, unless it's in a building
- Premises used for refining oil
- Premises used for the onward distribution of oil to other places
- Oil stored at domestic properties in containers in place before 15 March 2016
- Oil stored in accordance with the terms of an environmental permit

There is a phased implementation of the Oil Storage Regulations (OSR) in Wales

All non–exempt oil storage in Wales:

- **Installed after 15 March 2016 must comply with the Control of Pollution (Oil Storage) (Wales) Regulations 2016**
- **Installed before 15 March 2016 and within 10 metres of any waterway or 50 metres of any well, spring or borehole must comply by 15 March 2018**
- **Installed before 15 March 2016 must comply by 15 March 2020.**

### England

- The Control of Pollution (Oil Storage) (England) Regulations 2001

In England, oils covered by the regulations include: petrol, diesel, vegetable, synthetic and mineral oils. They apply to most industrial, commercial, and institutional sites storing oil in containers over 200 litres.

Refer to guidance for 'Oil storage regulations for business' on GOV.UK for more information.

The regulations apply to:

- **Above ground oil storage in containers over 200 litres unless the exemptions below apply.**

The regulations don't apply to:

- Waste mineral oil storage, refer to guidance on www.gov.uk
- Oil stored on farms for agricultural heat and power, Where the Silage, Slurry and Agricultural Fuel Oil (SSAFO) Regulations apply. Refer to 'Agricultural fuel oil' guidance on www.gov.uk
- Oil stored at a premises that is wholly or mainly used as a domestic dwelling where the tank capacity is 3500 litres or less.
- Oil stored in buildings, follow good practice recommendations.
- Oil stored wholly underground.
- Oil stored at premises used for refining oil.
- Oil stored at premises used for the onward distribution of oil to other places.

**The following sections (4b to 9) cover in some detail legal requirements and good practice for the storage of oil. Appendix A** contains a checklist to help you decide whether improvements are needed to your oil storage system to comply with the OSR.

## 4.b Building Regulations

Oil tanks connected to fixed combustion appliances, like central heating boilers and cookers, need to comply with the building regulations that apply in Northern Ireland, Scotland, Wales or England (Reference 9). These regulations include requirements for both environmental protection and fire safety. If you're having a new or replacement oil

tank fitted or having your tank altered, you should check with your local authority (usually your local council) to see how these Regulations apply to your oil storage tank. Alternatively, you can have the tank installed by a registered competent person, as they will ensure that any changes meet building regulations (see Section 16) and can self-certify the installation or changes. If you don't use a competent person you must pay for a building regulations certificate from your local council.

Even if your oil tank isn't covered by any of the Regulations above, following these guidelines is good practice and will minimise the risk of your oil causing pollution. In some sensitive locations, we may ask for more stringent environment protection measures than are described here.

## 5. Deciding where to put your tank

You should think about environmental, fire protection, access, maintenance and security requirements before deciding where to put a new or replacement oil storage tank.

### 5.a Avoid environmental high risk locations

We recommend that you don't store oil in high risk locations; these include:

- within 50 metres of a spring, well or borehole
- within 10 metres of a watercourse
- places where spilt oil could enter open drains, loose fitting manhole covers or soak into the ground where it could pollute groundwater
- places where a spill could run over hard ground to enter a watercourse or soak into the ground where it could pollute groundwater
- places where tank vent pipe outlets can't be seen from the filling point
- above roof level, as spilt oil can run unseen into guttering connected to surface water systems
- Source Protection Zones (SPZs) where groundwater is particularly vulnerable.

Oil spilt in these locations could pollute surface waters and groundwater. If these locations are unavoidable, then check with us before you arrange the installation of a new tank, as we may require additional environmental protection, e.g. overfill prevention device or oil separator on the surface water drainage system.

We recommend at all sites that you have secondary containment for your oil storage tanks wherever you put them, even if it's not required by Oil Storage Regulations (OSR), SSAFO Regulations or Building Regulations, (see Section 5c).

You should, or if OSR applies must, ensure that steps are taken, **to minimise the risk of damage to the secondary containment system by impact** or collision.

You should consider access for maintenance and deliveries to the tank (filling). Check with your local oil delivery company before making the final decision on where to place a tank. They need to take into account pollution prevention and staff health and safety aspects of filling your tank. This includes where they can safely park the oil tanker, where the delivery pipes will run and access to the tank. They will also be able to give advice relating to height of the fill point above ground and delivery pipe size.

### 5.b Avoid storing oil in areas at risk from flooding

Oil containers and tanks may float in a flood, causing pipelines to break and oil to be spilled. If there's no alternative, consider raising tanks above predicted flood water levels, as long as this doesn't compromise the tank integrity, safe delivery and handling of your oil. You could also secure your tank so it can't lift as water rises around it. Contact a registered competent person, (see Section 16) for advice on securing your tank. Contact us to check if your tank is in an area at risk from flooding. The NIEA, SEPA, Natural Resources Wales and the Environment Agency all have flood maps on their websites, which provide details of flood risk areas.

## 6. Oil storage tanks

Before choosing a new or replacement tank, you should check the following:

- if there are any legal requirements you must comply with; such as the need for secondary containment (see sections 6c and 6d)
- that it meets minimum manufacturing standards (see section 6a)
- the type of tank is suited to your requirements.

Also consider the:

- type of oil to be stored (see section 4)
- safe installation and routine maintenance (see section 7)
- location of the tank and impact protection (see section 5)
- intended use
- safe filling and dispensing (see section 10 and 9c)
- prevention of leaks from flexible delivery hoses.(see section 9d).

If you're replacing a tank you'll also have to consider how to safely empty, remove and dispose of your old one. A specialist contractor would be able to carry out this work according to the relevant standards. See the information in section 12 of this guidance – "What you should do with your old tank."

### 6.a Manufacturing and Quality Standards

There are recognised British Standard and trade association tank standards for different types of tank. Your tank manufacturer, supplier or installer should advise you on the minimum design and manufacturing standards under the appropriate accredited quality assurance scheme. It should comply with BS EN ISO 9001 (Reference 10). Plastic and steel tanks and tank systems manufactured to the Oil Firing Technical Association Ltd (OFTEC) Standards, OFS T100 and OFS T200 respectively meet these requirements.

Please note that compliance with standards for construction and manufacture doesn't guarantee compliance with OSR. Other aspects such as secondary containment, pipework, location and deliveries, also affect OSR compliance.

Choose a tank that:

- is expected to last at least 20 years, with proper maintenance, before it needs to be replaced
- is made of a material that is suitable for the type of oil you will store

- **is of sufficient strength and structural integrity to ensure that it won't burst or leak in ordinary use**
- has a way of preventing drain down by gravity e.g. top off-take and / or isolating check valves.

Check the recommended maintenance needed for your tank with the manufacturer.

## 6.b Types of oil storage tank

There is a range of oil storage tanks available. Above ground oil tanks are usually made from steel or polyethylene (plastic). They can be single skinned, double skinned or have a built in bund (integrally bunded) as a complete containment system.

**Single skinned tanks** are tanks made from one layer of steel or plastic. **Single skinned tanks and their ancillary pipework must be put into a secondary containment system,** often referred to as a bund. For tanks in open bunds, we recommend there is a minimum distance of 750 mm between the tank and the bund wall and 600 mm between the tank and the base to allow access for external inspection and maintenance. We recommend that the bund walls are high enough to prevent the "jetting" of oil from a small tank puncture hole reaching outside the bund and causing pollution.

**Double skinned tanks** have two layers of steel or plastic with a very small space between them; any ancillary equipment is positioned outside the second skin. The space between the two layers is not enough to contain 110% of the oil your tank can hold. **Double skinned tanks, along with ancillary pipework and valves, must be put into a constructed secondary containment system,** or they will not be compliant with the OSR.

**Integrally bunded tanks** have a primary container manufactured with integral secondary containment (see Section 6c and Figure 2) that can hold a minimum of 110% of the design volume of oil from the primary inner tank. Ancillary equipment will also be positioned within the secondary containment.

It is important that you know what sort of tank you have and how to use it. See 'Get to know your tank' from the oil care campaign (Reference 13).

Figure 1. Shows a diagrammatic example of an integrally bunded steel oil tank.

Figure 2. Shows a diagrammatic example of an integrally bunded plastic oil tank.

These tanks are manufactured off site, and installed onto a suitably constructed base. The diagrams show fixed draw-off pipes, and on Figure 2, an overfill prevention device and oil monitoring between the tank and secondary containment.

**Figure 1 Integrally bunded steel tank**

Diagram provided by James Blake and Co (Engineers) LTD

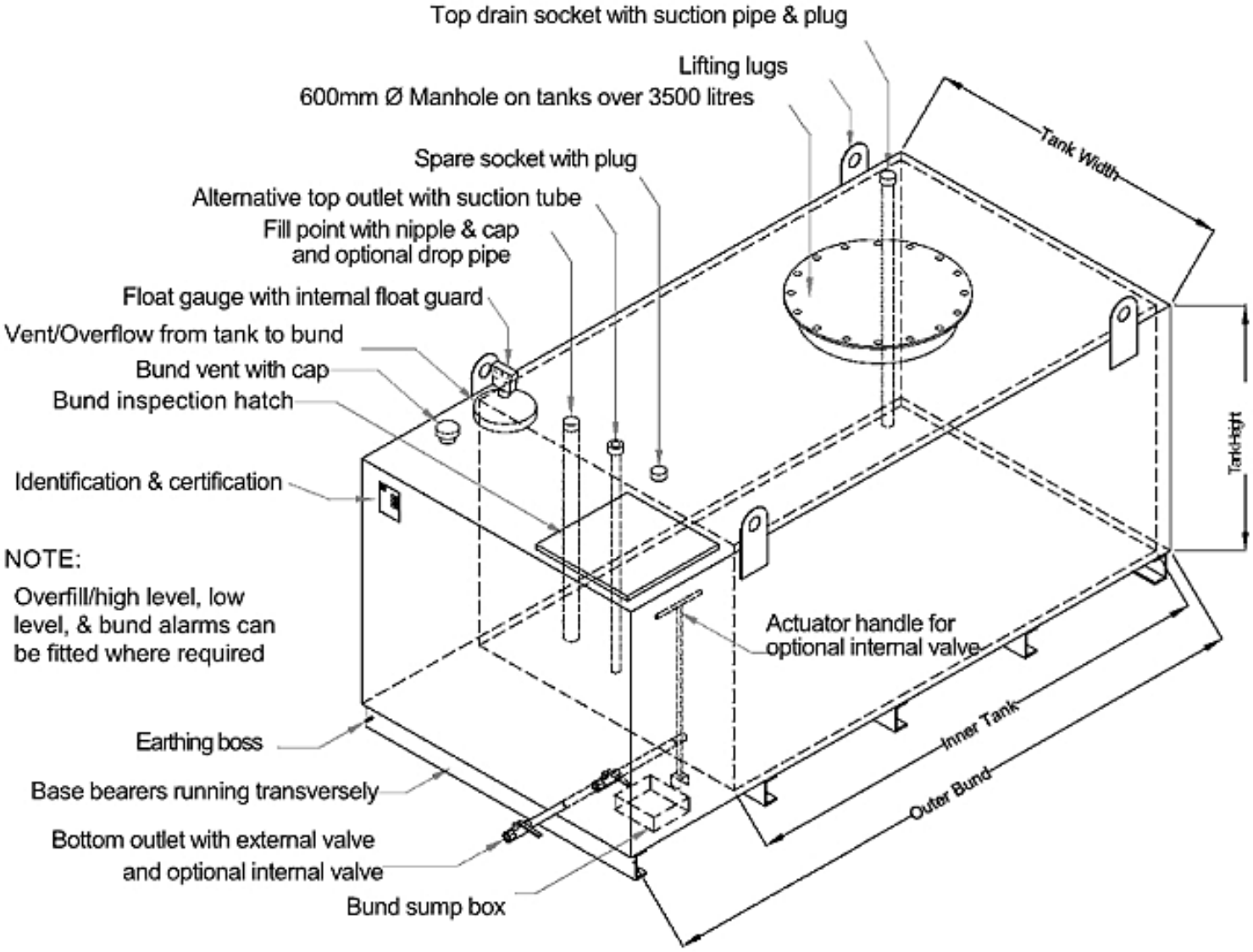

**Figure 2. Example of integrally bunded tank** (could be constructed of metal or polyethylene and may not be this shape and design)

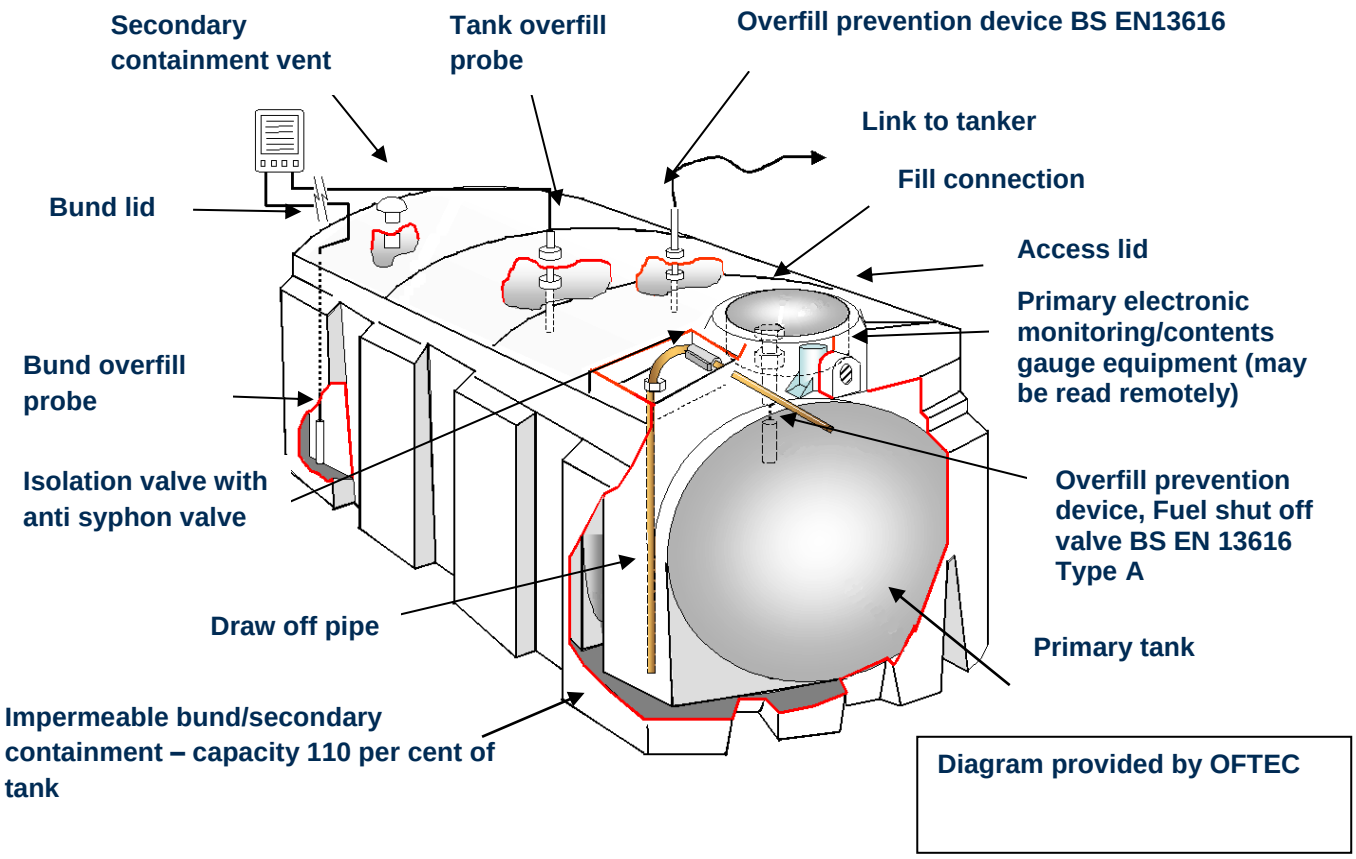


Figures 1 and 2 are for illustration only. Different configurations exist depending on the manufacturer, type of tank and installation. We normally recommend top tank outlets, as manual valves on bottom tank outlets must have someone in attendance.

You can get an Oil Care tank sticker for your storage tank from the Oil Care Campaign (Reference 13)

## 6.c Secondary Containment (also known as bunds)

Secondary containment is an area around a tank and its ancillary equipment designed to contain any loss of oil and to prevent it from escaping to the environment. It can be manufactured as part of an integrally bunded tank system or built on site ready for the tank to be put into it. Your tank may need to have secondary containment by law, depending on where it is and what it's used for. We recommend all oil tanks should have secondary containment as it is good environmental practice.

**Secondary containment must hold at least 110% of the volume of oil the tank is designed to contain.**

The extra 10% margin is intended to take into account a range of factors, including:

- loss of the total tank contents, for example due to vandalism or an accident
- sudden tank failure or leaks
- overfilling
- containment of fire-fighting agents
- dynamic factors such as overtopping caused by surge and wave action following tank failure
- an allowance for rainfall during an oil spill incident, although it is advisable to roof over secondary containment areas.

**If you have more than one oil storage tank in the system, the secondary containment must be capable of storing 110% of the biggest tank's capacity or 25% of the total capacity, whichever is the greater.**

**Secondary containment must be impermeable to oil and water with no direct outlet such as a pipe, valve or other opening to drain the system, and which could:**

- connect it to any drain, sewer or watercourse
- discharge oil onto a yard or unmade ground.

Ideally, any pipework to fill or empty your tank shouldn't pass through the secondary containment floor or walls (the bund). If this is unavoidable, **the joint between pipe and bund should be sealed;** we recommend using a material that is resistant to attack by the oil stored, **so that the containment remains leak-proof**.

Don't store anything in the secondary containment, as this will reduce the volume available in the event of a spill and can cause a fire risk if it becomes saturated in oil.

**For agricultural oil storage in Northern Ireland, Scotland and England, it is a legal requirement that bunds are expected to remain impermeable, with proper maintenance, for at least 20 years and have no gaps, holes or drainage outlets. (see References 6 and 8).** In Scotland, this is a requirement of the OSR. In Northern Ireland and England, it is a requirement of the SSAFO regulations. This will change in Northern Ireland during 2017, and this requirement will be included in the OSR.

If you're considering an integrally bunded tank system, check with the manufacturer to make sure that it's designed to provide at least 110% secondary containment capacity. Some tank systems may not provide enough capacity if your tank is overfilled. Be aware that it isn't easy to see into the secondary containment section of an integrally bunded tank. We recommend your tank is fitted with an overfill prevention device and secondary containment sensors that detect if oil has collected in the bund from an incorrect delivery, overfilling or an inner tank problem and to warn you if additional maintenance is needed.

### 6.d Secondary containment capacity

**Make sure your secondary containment has the capacity to take at least 110% of the volume your oil tank can hold.**

**For integrally bunded tanks**, you can contact the tank manufacturer with the model of your tank; this information should be on your tank somewhere. They should be able to confirm the secondary containment capacity. You should be aware that with integrally bunded tanks the capacity of the secondary containment will often take into account the volume of the primary containment tank. This is because in the event of a leak, the oil will find its level in both the primary and secondary containment.

If the capacity of the secondary containment is 110% of the capacity of the primary container, the actual difference in capacity may only be 10%. Overfill prevention devices are particularly important in these circumstances to prevent overfilling resulting in an oil spill.

For single or double skinned tanks within a constructed secondary containment system, you can calculate the bund volume yourself. You can take account of any volume taken up by tank supports within the bund and consider the volume taken up by any of pipework or pumps. The capacity of the part of the primary container that sits below the level of the bund can be included in the total capacity of the bund. You can find advice on calculating bund capacity in Appendix B.

## 7. Installing tanks

You should have your tank installed by a competent person who's registered with a professional scheme for the type of tank you're having installed. They will make sure that tanks are installed according to the relevant standards and good practice. Professional schemes are run by a number of organisations (see Section 16 for more details).

Tanks should be sited on an appropriately designed and constructed base or support, with sufficient room around it to protect the tank from fire in the surrounding area, see BS 5410 (Reference 12). Check what you need for your tank with the tank manufacturer or qualified tank installer.

To prevent pollution, the delivery and dispensing area around your tank should have an impermeable surface and be isolated from surface water drainage systems. For domestic oil tanks there may not be an impermeable surface available.

Make sure you keep the manufacturers and installers information for your tank. Leave all the markings and stickers on your tank when it's installed. These include tank manufacturer, make, model and capacity markings. Many oil tanks come supplied with an Oil Care Campaign tank sticker that gives information about what to do if you have an oil spill. It may be a legal requirement for your tank to have a sticker describing emergency actions if you have a spill. If your tank doesn't have a tank sticker, you can get one from The Oil Care Campaign (Reference 13). If you have more than one tank, label all your tanks and their fill points clearly, with the type of product stored and tank capacity.

You should protect your oil storage tank from the risk of fire. Building Regulations (Reference 9) allow for fire protection by using approved distance between the tank and surrounding structures or by a physical fire protection barrier. Don't store any materials close to your tank or in the secondary containment.

**Tanks within buildings** – in Northern Ireland, Wales and Scotland these must comply with the OSRNI, OSR Wales or OSR Scotland. In England follow good practice guidance to reduce your pollution risk. Building Regulations are also likely to apply.

**For tanks in constructed secondary containment**

If your tank is being installed in a constructed bund, the bund should be built using reinforced materials, with no damp-proof course and lined to ensure it is impermeable to oil.

Your bund should be designed to reduce the risk of oil spraying beyond the containment area if your tank developed a hole (known as jetting).

To reduce the chance of this happening you should:

- keep the tank as low as possible within the bund
- increase the height of the bund walls
- leave space between the tank and bund walls
- don't put one tank above another.

A bund that is open to the elements should also have a sump formed in the base so you can remove rainwater for safe and legal disposal.

The Construction Industry Research and Information Association (CIRIA) suggests in locations with high rainfall where 110% capacity in an open bund may not be enough to provide protection from loss of oil (reference 11). They give an alternative method to calculate the size of secondary containment needed for tanks in open bunds in locations with high rainfall. The method for calculating bund capacity depends on the risk of polluting water. If you're in any doubt about the sensitivity of a site, consult us. A roof over the oil storage area will help prevent the need for additional capacity in the bund, but you should consider aspects of health and safety for delivery and maintenance as well as fire safety, depending of the type of oil being stored.

## 8. Ancillary equipment

These are the fittings and pipework that all tanks will have, e.g. a vent pipe, but others may be needed according to the tank type, location or use.

For example:

- a heating oil tank may have a fixed draw off pipe
- a tank used for refueling may have a pump and flexible hose to deliver oil
- a tank with a remote fill point or in a sensitive location may have an overfill prevention device.

**Valves, filters, sight gauges, vent pipes, or other tank ancillary equipment, not including the fill pipe, draw-of pipe or pumps for oil with a flashpoint less that 32°C, must be within the secondary containment system,** so any discharges of oil are retained.

Many of these fittings are shown in Figures 1 and 2 above and are discussed below.

The Oil Care Campaign produce an oil tank user guide 'Get to know your oil tank', which should be a useful resource. Reference 13.

## 8.a Measuring tank contents

You need to be able to measure how much oil is left in your tank so you can order the right amount when your tank needs refilling and to monitor how fast you use your oil. There are many products available to measure tank contents including electronic, float and hydrostatic gauges, sight or visual gauges and dip sticks. Some are read at the tank, others remotely. Ask the tank manufacturer or a qualified tank installer for advice on a suitable system for your tank.

If you store flammable liquids (as classed by Health and Safety Executive), your gauge must be safe for use with the product you store.

### Sight gauges

- **must be located in the secondary containment**
- **must be properly supported** so it can't come loose
- **must be fitted with a valve that closes automatically when the gauge isn't in use**
- valves should never be kept open
- valves should only be opened when taking contents' readings.

Delivery drivers should close sight gauge valves at the end of their delivery. After your tank has been filled, check that the sight gauge is shut and isn't leaking. Sight gauge tubes aren't suitable for use with integrally bunded oil tanks.

Dipstick - only use it in the specific tank type for which it was designed, to ensure the reading is accurate.

## 9. Pipework

**Underground pipework**

Underground pipes should be avoided where possible as they can't easily be checked for damage or leaks and have a greater risk of causing pollution. You should only use underground pipe work where you can't fit pipes above ground. See section 9f.

### All above ground pipework must be:

- **positioned or protected to minimise the chances of damage by impact or collision**
- **protected against corrosion**
- **supported** so it's secure and can't come loose (a legal requirement in England; good practice elsewhere).

All above ground pipework should also be:

- made of a material suitable for use with the oil you're storing
- where appropriate, insulated to prevent freezing up and frost damage.

## 9.a Vent pipe

This allows oil vapour and air to escape from the tank when it is being filled or when these gases expand with heat on hot days, it also allows air in when fuel is being drawn off.

We recommend that tanks (including those in buildings) are installed so that vent pipes can be easily seen during deliveries; and that the vent pipes are within and discharge into the secondary containment system.

**Legal requirements:**

**In Northern Ireland:**

- **Vent pipes must be within the secondary containment system and must be arranged so any oil discharged is contained within the system.**
- **The tank must be fitted with an automatic overfill protection device (which may include an alarm sounding device) if the filling operation is controlled from a place where it is not reasonably practical to observe the tank or any vent pipe.**

**In Scotland:**

- **Vent pipes (including those on tanks within buildings) must be within the secondary containment system.**
- **The tank must be fitted with an automatic overfill protection device (which may include an alarm sounding device) if the filling operation is controlled from a place where it is not reasonably practical to observe the tank or any vent pipe.**

**In Wales:**

- **Vent pipes must within the secondary containment system and must be arranged so that any discharge is directed vertically downwards into the system.**
- **The tank must be fitted with an automatic overfill protection device, if the filling operation is controlled from a place where it is not reasonably practicable to see the tank and any vent pipe.**

**In England:**

- **Vent pipes must within the secondary containment system and must be arranged so that any discharge is directed vertically downwards into the system.**
- **The tank must be fitted with an automatic overfill protection device, if the filling operation is controlled from a place where it is not reasonably practicable to see the tank and any vent pipe.**

## 9.b Fill point

The fill point is where the tanker delivery hose connects to fill the tank. There are different arrangements depending on tank type, size and location.

Coupling - **If your tank fill point has a screw fitting, or other fixed coupling that is in good condition, it must be used when filling the tank.** The fill point should have a lockable fill cap with a chain and be marked clearly with the product type, tank capacity and, where appropriate, tank number. The cap should be replaced on to the fill point after each delivery to protect it from damage and unauthorised use.

Position – we recommend your fill point should be at the tank and within the secondary containment system or, **if outside the secondary containment, must have a drip tray to catch any oil spilled during deliveries.** Where your fill point is outside the secondary containment system, this could be positioned in a suitable cabinet with a drip tray to catch any oil spilled during deliveries.

Fill point drip trays should be:

- clean, free from water and other debris before each use
- able to be moved without risk of spilling the oil - we recommend your drip tray holds at east 3 litres, it may need to be larger
- checked after each delivery and if necessary safely emptied before being put away; we recommend you ask your oil delivery company to do this for you
- kept somewhere safe where they can't collect rain water when not in use.

**Remote fill** - if there's no alternative and you have to have a fill point which isn't near the tank (or it isn't practical to see the tank and vent pipe), a remote fill point will be needed. Your registered competent person (see Section 16) can advise you about standards required for remote fill points

**In Northern Ireland, Scotland and Wales, if you have a remote filling point and the vent pipe can't be seen during delivery you must have an overfill prevention device.** This should conform to the OFTEC standard OFS E105.

**In England, if your tank and vent pipe can't be seen from where a delivery is controlled, even if the fill point is not remote, the tank must have an overfill prevention device.** This should conform to the OFTEC standard OFS E105.

Shut-off valves should be fitted to remote fill pipes because they can retain oil after the delivery.

**If you have more than one tank** - provide separate fill pipes for each tank, unless they're connected by a balance pipe with a greater flow capacity than the fill pipe. Each fill pipe should have its own fill point shut off valve, and be marked with its corresponding tank/compartment number, volume and type of oil.

When a tank is removed or decommissioned, make sure you remove the remote fill point as well to prevent fuel being discharged into redundant pipes.

## 9.c Pipework to take oil from your tank (draw-off or supply pipe)

Whenever possible, position supply pipework above ground to make it easier to inspect and repair. We recommend using tanks that have top outlet off take pipes; and that feed lines should have anti-siphon (**a requirement in Wales**) and isolating valves to prevent the tank contents draining down because of leaks, damage, theft or vandalism.

Use pumped dispensing from oil storage tanks for refueling to reduce the chance of oil spills. If you can't avoid gravity dispensing, then tanks should be properly supported and installed. Suitable secondary containment for the tank and its ancillary equipment should be designed to reduce the chance of oil 'jetting' from the high tank in the event of an overfill or damage.

Consider the risk to the user from working at height (to fill, inspect, maintain and draw-off), suitable ladders, railings and other health and safety equipment may be necessary.

**Filters or isolating valves** used to protect the draw-off pipe or downstream equipment in a gravity-feed system aren't considered ancillary to the container. Where practicable, locate this equipment within the secondary containment system. We recommend that valves should be lockable or have removable hand wheels.

## 9.d Flexible delivery pipes

These should only be used where you need to move the end delivery point, for example when fuelling vehicles. **Fit the pipe with a tap or valve at the delivery end, which closes automatically when not in use;** we recommend you use a trigger nozzle designed to dispense oil. **Where the pipe isn't fitted with an automatic shut-off device, it mustn't be possible to fix the tap or valve in the open position.**

**The pipe must either:**

- **have a lockable valve where it leaves the tank which is locked shut when not in use and be kept in the secondary containment, or**
- **must be in an enclosed secure cabinet which is locked shut when not in use and has a drip tray.**

**Dispensing pumps should be installed with all the following:**

- **positioned to minimise the risk of damage by collision or protected from collision**
- **fitted with a valve in its feed line that prevents the tank contents emptying if there's damage to the pump or feed line**
- **protected from unauthorised use,** for example with a remote electrical switch or locked when not in use.

Pumps **are not** ancillary to the oil tank. You should ensure any oil that could leak from a pump is contained either by a bund or drip tray. Pumps for oil with a flash point below 55°C should never be within the secondary containment system because of the risk of explosion. You should assess the risk for all stored oil, and if appropriate use a pump that is intrinsically safe and certified to ATEX (EC Directive 2014/34/EU - *Atmospheres*

*Explosives*). If your pump is within the secondary containment, check its positioned above the 110% containment level so it can't become submerged.

### 9.e Taps and valves

Taps and valves that are permanently attached to a tank and can discharge oil from that tank must:

- **be fitted with a lock**
- **be locked shut when not in use**
- **In England, must be within the secondary containment system.**

### 9.f Underground pipework

These should be avoided where possible as they can't easily be checked for damage or leaks and have a greater risk of causing pollution.

If you do have them we recommend they should:

- be double skinned (pipe in pipe)
- be within concrete ducting
- have as few joints as possible
- be marked clearly on site plans and when possible on the ground.

**Underground pipework must be protected against corrosion and from physical damage** like that caused by excessive surface loading, ground movement or ground disturbance. **If mechanical joints have to be used, they must be readily accessible for inspection under a hatch or cover.**

**You must have adequate facilities for detecting leaks from underground pipework. If you use a continuous leak detection device, it should be maintained and tested regularly (in Scotland at least every 5 years).** Keep a record of the test results and any maintenance work completed.

If you don't have a continuous leak detection system you must test:

- **pipework before use**
- **pipework with mechanical joints every five years**
- **all other pipe work at least every ten years.**

These are minimum requirements and it's good practice to do this more frequently.

### 9.g Overfill prevention devices

We recommend your tank system includes an overfill prevention devices to safeguard against spills. These can be electronic or mechanical which sound an alarm and/or give a visual warning or automatically stop the oil delivery into the tank. They may be a legal requirement depending on tank location, fill point and vent pipe arrangements. Overfill prevention devices should comply with the Oil Firing Technical Association Ltd (OFTEC) standard OFS E105.

## 10. Safe deliveries to your tank

All your tanks should be labelled with the capacity and type of oil they contain and if you have more than one tank should be individually numbered to help identify them. If you have more than one tank then remote fill pipes should be labelled to identify the tank it fills.

Before you order an oil delivery:

- check how much oil is in the tank
- work out the spare capacity
- decide how much oil you need but make sure you don't over order.

Supervise all deliveries. Ensure that whoever is supervising the delivery knows about the tank, its equipment, how the overfill prevention system works and what to do if there's a spill. If you have more than one tank, make sure the correct tank is being filled. The Federation of Petroleum Suppliers (FPS) produces information on safe deliveries. For additional information, see Section 16.

If your tank is filled from a place where it is not practicable to see the tank and any vent pipe, it may need to have a remote fill point fitted.

**In Northern Ireland, Scotland and Wales, where a tank has a remote filling point and the vent pipe can't be seen during the filling operation, you must have an automatic overfill prevention device fitted to your tank.**

**In England; if your tank and vent pipe can't be seen from where a delivery is controlled, even if the fill point is not remote, the tank must have an overfill prevention device.**

We recommend you avoid remote filling points where possible. Your registered, qualified tank installer, (see Section 16) can advise you about standards required for remote fill points.

**If your tank has a screw fitting or other fixed coupling that's in good condition, it must be used when filling the tank.** Your fill point should have a lockable fill cap with a chain and be marked clearly with the product type, tank capacity and, where appropriate, tank number. Make sure the cap is replaced on to the pipe after each delivery to protect it from damage and unauthorised use, (see Section 7b for more information on fill points).

### Protect soil and water

The area around your tank where deliveries are made and, if applicable, oil is dispensed should have an impermeable surface and be isolated from surface water drainage systems. This will help stop oil and/or contaminated water getting into the soil and groundwater. If any oil is spilt during an oil delivery, you should make sure that it can't run into a surface water drainage system.

You should consider if you need a suitably sized oil separator to direct oily liquid away from surface waters and prevent oil escaping from your site. This will reduce the risk of any spilt oil causing pollution if there's a spill. You can check with your environmental regulator to see if environmental sensitivities in your local area mean drainage from your oil tank area should pass through an oil separator of an approved design (see GPP 3: Reference 14).

## 11. Check legal compliance for your existing tanks

There may be legal requirements that your existing tank (including home heating tanks) need to comply with for the OSR Wales, OSR Scotland, OSR Northern Ireland, OSR England or Building Regulations. The checklist in Appendix A will help you check your tank for most requirements of the OSR Northern Ireland, OSR Scotland and the OSR Wales. In England, check on the GOV.UK website.

## 12. Looking after your tank

The oil tank user guide 'Get to know your oil tank', Reference 13, contains simple guidance on looking after your tank. Make sure you have a copy, as it includes space for you to record essential information about your tank, including when its last annual check was.

You should inspect all accessible parts of your tank, secondary containment, ancillary equipment and pipework regularly, for signs of damage or leaks, if you're unsure what to look for see the Oil Care website. As a minimum you should inspect your tank before an oil delivery and if you are aware that the oil level in the tank is decreasing faster than expected. If you're unsure how frequently you should do this, contact your environmental regulator for advice. If you notice any damage, you should have it repaired or replaced immediately by a registered competent person.

### Maintenance

Your tank manufacturer will be able to tell you what regular maintenance your tank needs. Use a registered competent person to check your tanks, secondary containment and pipework every year and remove any condensation water that has accumulated within the tank. You should receive a written report on the state of your tank after the inspection is completed. Any repairs or alterations detailed in the report should be done by a registered competent person straightaway.

To make sure a constructed bund retains its integrity, use a reputable company to repair any defects in the bund wall or lining promptly.

**Keep a log** of the inspections, any repair work on your tanks and who's done it.

**Record oil usage**. Regularly make a note of how much oil is in your tank and compare this to your previous usage. Contact a registered competent person if you need advice about methods of monitoring your oil use and how often. If you're suddenly using more oil and you can't explain why, this could indicate a problem with your tank or pipework. Ask a registered competent person to check your tank and pipework for faults and make any repairs immediately.

**Removing rain water**. If you have a tank in an open bund, check the bund after heavy rainfall. If there's no rainwater in the bund, it might not be sealed properly and you should have it inspected and repaired. If rain water has collected in your bund, it will reduce the amount of oil it can contain. If it's necessary to remove accumulated rainwater, we recommend you do this with a manually operated pump or by bailing from the sump. In remote locations, you could use automatic systems that can distinguish between the oil and water in the bund. If you install one of these systems, you need to contact us for advice on where you can dispose of the discharge and if you need a permit or authorisation.

In the long term, it may be more cost-effective to construct a roof over the tank and secondary containment. Consider fire risk and health and safety for maintenance and the delivery driver before fitting a roof.

**Dispose of sump water safely and legally.** Water taken out of the bund might be contaminated. Any accumulated water, oil or debris should be removed and disposed of in line with waste management legislation. In all cases where wastes are removed, as the waste producer you are obliged under the Duty of Care (see Reference 15) to describe the waste accurately and dispose of it properly.

**In Northern Ireland, Wales and England**, waste contaminated with oil is classed as hazardous waste unless you can show there is under 0.1% oil.

**In Scotland**, waste contaminated with oil is classed as special waste, unless you can show there is under 0.1% oil. To establish if enough oil is present to make a waste special, a generic threshold of 0.1% may be used; however, if the result is below this, there may still be other hazards that make the waste special, such as flammability or toxicity, or the presence of other contaminants.

A consignment note system applies for disposal of these hazardous or special wastes. For more details about waste oils in Northern Ireland, Scotland and Wales, see either GPP8 (Reference 7) or your regulators' websites.

## What you should do with your old tank

You should have your tank removed by a competent person who's registered with a professional scheme for the type of tank you're having removed. They will make sure that tanks are removed according to the relevant standards following good practice and waste management legislation. Professional schemes are run by a number of organisations (see Section 16 for more details)

We don't recommend your tank is disconnected and left on site. If the structure of the tank deteriorates any oily residue in the tank could leak and cause pollution. If your tank has a remote fill point care should be taken when removing it and its pipework, as it can contain fuel from the original tank. This can cause pollution if it is not drained and removed.

It's important that remote fill pipes are removed or made permanently unusable if the tank they connected to is removed. Spills caused by oil delivery companies pumping oil through a remote fill pipe that no longer has a tank attached to the other end are surprisingly common.

Make sure that a tank is fully drained, degassed and certified when it's taken out of use and before it's removed. Only suitably qualified and competent technicians should do this work. Never carry out work that heats the tank until after it has been degassed and the appropriate certificate issued (see Reference 16). Under waste management legislation, decommissioned tanks taken off site must be removed by a licensed waste carrier and must be accompanied by a waste transfer note. Tanks can only be disposed of at an appropriately licensed facility. In Scotland and Northern Ireland, you can find lists of licensed waste sites on the NetRegs website. In England and Wales, contact the Environment Agency or Natural Resources Wales to find your nearest site.

After your tank has been decommissioned or removed, check that the surrounding soil or groundwater hasn't been contaminated. This can include testing surface and subsurface soil and groundwater samples for products relating to what you were storing. If contamination is found, take action as soon as possible to remove the pollution. Make sure you repeat the testing after the work has been done to ensure all the contamination has been removed. For more information see Reference 1 or contact your environmental regulator. Contact details for NIEA, SEPA and NRW are at the end of the document.

## 13. Mobile bowsers

Mobile bowsers are oil storage containers that can dispense oil and are designed to be moved, either being towed or lifted onto another vehicle, but which can't move under their own power. As well as the requirements for the storage container (Section 6) and secondary containment (Section 6c) above, the following apply to mobile bowsers:

- **Any flexible pipe, tap or valve must be fitted with a lock where it leaves the container and be locked shut when not in use**
- **Flexible delivery pipes must be fitted with manually operated pumps or a valve at the delivery end that closes automatically when not in use.** We recommend you use a nozzle designed to dispense oil
- **The pump or valve must have a lock and be locked shut when not in use.**

More detailed information is also available in References 6 and 8.

## 14. Security

Your oil storage areas should be secured to prevent theft and vandalism. **Permanent taps or valves through which oil can be discharged to open areas should be locked when not in use.** Display a notice telling users to keep valves, nozzles and trigger guns locked when they're not in use. **Pumps should also be protected from unauthorised use.**

Valve taps or levers should be corrosion resistant, strong enough to be tamperproof when locked and marked to show whether they are open or closed. **When not in use, they should be locked shut.** If the tank is being decommissioned then any valve taps or levers should be fitted with a blanking cap or plug.

Try to position oil containers or stores where there is minimal chance of collision or impact, for example from moving vehicles. If the Oil Storage Regulations apply, you must ensure you protect the containers and the secondary containment system.

Protect your oil storage containers from the risk of theft or vandalism; site them where they can be seen and inside a locked compound if possible. Sites away from perimeter fences are often safer. If a pollution incident is caused on your site by vandalism, you will still be held responsible for any clean-up costs.

## 15. Oil spills

An oil spill from your tank is likely to cause pollution; this will damage the environment and your reputation. Keep a spill kit with commercial sorbent products, sand or earth close to your oil storage to deal with spills. Make sure you or your staff know how to use it safely.

In Northern Ireland, Scotland and Wales 'Pollution incident response planning': GPP21, Reference 17, tells you how to draw up a plan to protect your site, and 'Dealing with spills': GPP 22, reference 18, will help you decide what action you may be able to take if you do have a spill.

If you have a spill, take immediate action to stop the oil getting into any drains or watercourses. If you can, soak up the spilt oil with the contents of your spill kit, without putting yourself in danger. Don't hose the spill down or use any detergents to try to get rid of it; you could make the pollution worse.

Notify us by calling the Incident/Pollution Hotline on **0800 80 70 60** (Northern Ireland, Scotland and England) or the Emergency hotline in Wales on **0300 065 3000**, (press 1 - 24-hour service)

If oil soaks into the ground, a professional company should remove the soil soaked in oil, so it doesn't cause long term pollution. Store any materials that are soaked in oil in containers that won't let the oil run away until it can be correctly and legally disposed of. Surface and subsurface soil and groundwater samples may need to be taken and tested for products relating to the incident. For details on how to legally dispose of materials soaked in oil, which may be classed as hazardous or special waste, see Reference 7 GPP 8: Safe storage and disposal of used oil.

## 16. References

All the Guidance on Pollution Prevention notes (GPPs) are available at: www.netregs.org.uk.

These notes are endorsed by NIEA, SEPA and NRW. In England please see GOV.UK.


1. Installation, decommissioning and removal of underground storage tanks: GPP 27
2. Drums and intermediate bulk containers: GPP 26
3. Refuelling facilities: GPP 7
4. Secondary and Tertiary Containment of Bulk Hazardous Liquids at COMAH establishments. Health and Safety Executive (HSE) http://www.hse.gov.uk/comah/guidance/bulk-hazardous-liquids.pdf
5. Buncefield task group final report, HSE http://www.hse.gov.uk/comah/buncefield/final.htm
6. For Northern Ireland and Scotland visit www.netreg.org.uk for information on the Oil Storage Regulations

   For Northern Ireland, Guidance note for the Control of Pollution (oil storage) Regulations (Northern Ireland) 2010, available on the Department of the Environment website https://www.daera-ni.gov.uk/publications/control-pollution-oil-storage-regulations

   For Scotland, Guidance note for the Water Environment (Oil Storage) (Scotland) Regulations 2006, available on the Scottish Government website http://www.gov.scot/resource/doc/1057/0029448.pdf

   For Wales, Guidance note for the Control of Pollution (Oil Storage) (Wales) Regulations 2016, available on the Welsh Government website at http://gov.wales/topics/environmentcountryside/epq/waterflooding/oil-storage-standards/?lang=en

   For England visit https://www.gov.uk/guidance/storing-oil-at-a-home-or-business
7. Safe storage and disposal of used oils: GPP 8
8. Agricultural oil.

   For Northern Ireland: Guidance note for the Control of Pollution (Silage, Slurry and Agricultural Fuel Oil) Regulations (Northern Ireland) 2003, available on the Department of the Environment website https://www.daera-ni.gov.uk/articles/silage-slurry-and-agricultural-fuel-oil-ssafo-storage

   In Scotland, Prevention of Environmental Pollution from Agricultural Activity (Code of good practice) (PEPFAA Code), available on the Scottish Government website http://www.gov.scot/Topics/farmingrural/Agriculture/Environment/PEPFAA/Overview

   In Wales, Code of Good Agricultural Practice, Protecting our Water, Soil and Air (under review May 2016) available at http://gov.wales/topics/environmentcountryside/farmingandcountryside/farming/code-good-agricultural-practice-cogap/?lang=en

For England: Silage, Slurry and Agricultural Fuel Oil on the gov.uk website https://www.gov.uk/guidance/storing-silage-slurry-and-agricultural-fuel-oil

9. **In Northern Ireland**, The Building (Amendment) Regulations (Northern Ireland) 2006 Technical booklet L https://www.dfpni.gov.uk/articles/building-regulations-technical-booklets

**In Scotland**, Building (Scotland) Act 2003 and applicable regulations under that act; Environment section of the Building Standards Technical Handbooks (Domestic and Non Domestic Handbooks 2015), Scottish Government http://www.gov.scot/Topics/Built-Environment/Building/Building-standards/publications/pubtech

**In Wales**, The Building Regulations 2010, Combustion appliances and fuel storage systems Approved Document J

http://gov.wales/topics/planning/buildingregs/approved-documents/?lang=en

**In England** refer to https://www.gov.uk/government/collections/approved-documents

10. BS EN ISO 9001. Quality management systems Requirements. British Standards Institution BSI http://www.bsigroup.com/en-GB/iso-9001-quality-management/

11. Above-ground proprietary prefabricated oil storage tank systems. C535. Construction Industry Research and Information Association (CIRIA), available on the CIRIA website at http://www.ciria.org/Search?SearchTerms=c535

12. BS 5410 -1:2014 Code of practice for oil firing. Installations up to 45 kW output capacity for space heating and hot water supply purposes. BSI shop http://shop.bsigroup.com/ProductDetail/?pid=000000000030285454

BS 5410 -2: 2013 Code of practice for oil firing. Installations of 44kW and above output capacity for space heating, hot water and steam supply purposes. BSI shop http://shop.bsigroup.com/ProductDetail/?pid=000000000030170836

BS 5410 -3: Code of practice for oil firing. Installations for furnaces, kilns, ovens and other industrial purposes. BSI shop http://shop.bsigroup.com/ProductDetail/?pid=000000000000097376

13. Get to know your oil tank, available from the Oil Care Campaign website, http://oilcare.org.uk/

14. The use and design of oil separators in surface water drainage systems: GPP 3

15. Duty of Care, codes of practice:

**Northern Ireland**: https://www.daera-ni.gov.uk/publications/waste-management-duty-care-code-practice

**Scotland**: http://www.gov.scot/resource/0040/00404095.pdf

**Wales**: https://www.gov.uk/government/publications/waste-duty-of-care-code-of-practice

**England**: https://www.gov.uk/government/publications/waste-duty-of-care-code-of-practice

16. Cleaning and gas freeing of tanks containing flammable residues. Guidance note CS15. SBN 9780717613656. Health and Safety Executive (HSE) http://www.hse.gov.uk/pubns/books/cs15.htm

17. Incident response planning: GPP 21

**18.** Dealing with spills: GPP 22

Copies of regulations are available from The Stationery Office, tel 0870 600 5522 or www.tso.co.uk.

## Other useful sources of information:

- Contact the Oil Bank Line at www.oilbankline.org.uk or on 08708 506 506 for details of your nearest oil recycling bank.
- Energy Institute. Tel: 020 7467 7100 www.energyinst.org.uk/home
- Design, Construction, Modification, maintenance and Decommissioning of Filling Stations ISBN 0-85293-419X.
- Federation of Petroleum Suppliers (FPS): Oilsafe - Home heating oil advice http://speed.oilsave.org.uk/OilWise

## Useful websites:

- The British Standards Institute http://shop.bsigroup.com/
- The Construction Industry Research and Information Association (CIRIA) www.ciria.org

On-line advice and support services:

- For Northern Ireland and Scotland: www.netreg.org.uk
- For Wales: Natural Resources Wales https://naturalresources.wales/splash?orig=/
- For England: www.gov.uk

Health and Safety Executive: www.hse.gov.uk

The Oil Care Campaign: http://oilcare.org.uk/

- For details of oil recycling facilities across the UK – Find your nearest oil bank
- Useful good practice information to help you look after your oil storage
- Stickers and labels for oil storage tanks
- Spill training information
- For details of oil recycling facilities across the UK – Find your nearest oil bank

Oil Storage information:

- For Wales – http://gov.wales/topics/environmentcountryside/epq/waterflooding/oil-storage-standards/?lang=en

- For Northern Ireland - https://www.daera-ni.gov.uk/articles/oil-storage
- For Scotland - www.sepa.org.uk/water/water_regulation/regimes/pollution_control/oil_storage.aspx

## Professional schemes for competent persons:

- The Competent Persons Directory http://www.competentperson.co.uk/
- APHC - Association of Plumbing and Heating Contractors - Wales. www.competentpersonsscheme.co.uk
- BESCA - Building Engineering Services Competence Accreditation Limited, England and Wales. http://www.besca.org.uk/
- NAPIT - National Association for Professional Inspectors and Testers Certification Limited, www.napit.org.uk
- NICEIC - National Inspection Council for Electrical Installation Certification, www.niceic.org.uk
- OFTEC - Oil Firing Technical Association Ltd, www.oftec.org.uk
- Scottish and Northern Ireland Plumbing Employers Federation (SNIPEF) www.snipef.org
- The Stationery Office: www.tsoshop.co.uk

## Appendix A Checklist for oil storage tanks

- Completing this checklist will help you decide if you need to improve your oil storage facilities to comply with the Oil Storage Regulations (OSR) and building Regulations in Northern Ireland, Scotland and Wales. If you're not sure of the answer, don't guess – get professional help and advice.
- If your tank is exempt from the OSR, we recommend you follow these guidelines as fully as possible to reduce the risk of your oil causing pollution. There are other requirements for the Building Regulations that you tank may need to comply with. Check with your local authority for details.

| **General requirements** | **X** OR **√** | **Comments** |
|---|---|---|
| Is the tank 'fit for purpose' and in good condition (unlikely to leak or burst in ordinary use)? | | e.g. polyethylene isn't deformed or cracked, e.g. metal isn't rusty |
| Is the tank situated more than 10m from a watercourse or 50m from a well or borehole? If unsure, contact us. | | |
| Is the tank within a secondary containment system? | | |
| Is the tank/containment system located or protected so an impact or collision can't damage it? | | |
| **Secondary containment: storage capacity** | **X OR √** | **Comments** |
| For a single tank, is the secondary containment at least 110% of the maximum storage capacity of the tank? | | See calculation table, page 30 |
| For two or more tanks in one secondary containment system, is the secondary containment at least 110% of the biggest tank's maximum storage capacity, or 25% of the total maximum storage capacity of all the tanks, whichever is the greatest? | | |
| Secondary containment: integrity | **X OR √** | Comments |
| Is the secondary containment impermeable to water and oil? | | |
| Is the secondary containment system intact and without openings or valves for drainage? | | Get any cracks or other damage repaired. |
| Are any draw-off pipes/feed lines and fill pipes that pass through the secondary containment sealed adequately? | | |
| **Tank ancillary equipment** | **X OR √** | **Comments** |
| Are all valves, sight gauges, vent pipes and taps within the secondary containment system? | | |
| If the tank has a sight gauge, is it properly supported and fitted with a British Standard valve that closes automatically when the gauge isn't in use? | | |

| | | |
|---|---|---|
| Are fill and draw-off pipes/feed lines located or protected from impact or collision damage? | | |
| And, if applicable, are draw-off pipes/feed lines protected from corrosion and frost damage? | | |
| And, if above ground, are they supported properly? | | |
| Are vent pipes, taps and valves arranged so that any oil lost will be retained within the containment system? | | |
| Are all taps and valves fixed to the storage tank, through which oil can be discharged to the open, fitted with locks and locked shut when not in use? | | |
| **Deliveries to the tank (filling)** | **X OR √** | **Comments** |
| Is the fill pipe situated within the secondary containment system or, if not, is a drip tray big enough to contain any oil that remains in the pipework after filling available? | | Empty the drip tray after the tank is filled. |
| Can the tank and vent be seen from the point where the filling operation is controlled or, if not, is the tank fitted with an automatic overfill prevention device? | | |
| If the tank has a screw fitting or other fixed coupling, is it in good condition? | | |
| Are fittings/couplings being used when the tank is filled? | | You need to discuss this with your oil supplier. |
| **Underground pipes (for filling and/or draw off)** | **X OR √** | **Comments** |
| Are underground pipes for filling, draw-off or feed protected from physical damage? | | |
| Are all mechanical joints situated as a place accessible for inspection? | | For example, under a hatch or cover. |
| Are there adequate facilities for detecting leaks? | | Continuous leak detection equipment or regular testing of pipework and fittings |
| If permanent leak detection is provided, is it maintained in working order and tested at appropriate intervals? | | |
| If permanent leak detection isn't provided, have the pipes been tested before use? | | |
| Is pipework with mechanical joints tested for leaks every five years? | | |
| Is all other underground pipework tested for leaks every ten years? | | |

| **Flexible draw-off pipes (for draw off)** | **X OR √** | **Comments** |
|---|---|---|
| Is the flexible draw-off pipe fitted with a tap, valve or nozzle at the delivery end that closes automatically when not in use? | | If the tap or valve can be fixed in the open position, it must have an automatic shut-off device. |
| Is the pipe kept within the secondary containment system when not in use or enclosed in a secure cabinet equipped with a drip tray? | | |
| Is there a lockable valve where the pipe leaves the container which is locked shut when not in use? | | |
| **Pumped draw-off (non-gravity draw-off)** | **X OR √** | **Comments** |
| Is the pump fitted with a check valve in the feed line to the pump? | | |
| Is the pump protected from unauthorised use and locked or isolated when not in use? | | |
| Is the pump located or protected from impact or collision damage? | | |

- If you can't answer a question or have crosses in the second column, it's likely that your oil storage installation needs to be upgraded to comply with the OSR unless it is exempt. To avoid the risk of pollution, take action to upgrade your oil storage as soon as possible.

## Appendix B - Calculation of capacity for tanks in open secondary containment systems

- We've included this so you can check your existing secondary containment meets the minimum requirements of the OSR.
- Calculate the capacity of a tank located within an existing open containment system by making the measurements shown in the table below. If the tank supports, pipework or pumps take up significant space, take this into account in the calculation.
- The volume of the primary tank that is below the height of the bund wall can be included in the calculation of the capacity of the bund. The oil will find its own level in both containers if the primary tank leaks.
- Where the tank is enclosed within a proprietary system, refer to the manufacturer for this information.

| **Calculation** | **Result** | |
|---|---|---|
| Maximum capacity of primary tank(s)<br><br>If unknown, use tank length x width x depth in metres and multiply by 1,000 to convert to litres. | ..... litres | A |
| Containment capacity = length x width x depth of secondary container in metres. | .....m3 | |
| Then multiply by 1,000 to convert to litres | ..... litres | B |
| Volume lost in secondary containment by tank supports (if significant) in cubic metres. | .....m3 | |
| Then multiply by 1,000 to convert to litres | ..... litres | C |
| Actual containment capacity = B – C (C = 0 if tank supports don't occupy a significant volume). | ..... litres | D |
| Minimum containment capacity (110%) = (110/100) x A | ..... litres | E |

- If D is equal or greater than E, then the containment system volume is adequate and will comply with the OSR. We may require additional containment volume in some environmentally sensitive situations.
- If D is less than E, then the containment system capacity is insufficient and will not comply with the OSR.
- For installations where the tank takes up a significant part of the bund, the capacity available in the event of overfilling may be inadequate. You'll need to consider delivery procedures and alarm systems to manage this risk.

## Contact details

**Incident/Pollution hotline for Northern Ireland, Scotland and England : 0800 80 70 60 (24 hrs)**

**Wales: Emergency hotline: 0300 065 3000**, (press 1 - 24-hour service)

**Floodline - England, Wales and Scotland:** 0345 988 1188

**Flooding incident line (NI):** 0300 2000 100

### Natural Resources Wales

www.naturalresourceswales.gov.uk

HEAD OFFICE (Ty Cambria)

29 Newport Road,

Cardiff

CF24 0TP

Tel: 0300 065 3000 (Mon-Fri, 9am-5pm)

enquiries@naturalresourceswales.gov.uk

### Scottish Environment Protection Agency

www.sepa.org.uk

Strathallan House

The Castle Business Park

Stirling

FK9 4TZ

Tel: 03000 99 66 99

http://www.sepa.org.uk/contact/

### Northern Ireland Environment Agency

https://www.daera-ni.gov.uk/northern-ireland-environment-agency

HEAD OFFICE

Klondyke Building

Cromac Avenue

Gasworks Business Park
Lower Ormeau Road

Belfast BT7 2JA

Tel: 0300 200 7856

nieainfo@daera-ni.gov.uk

| | |
|---|---|
| The Energy Institute | https://www.energyinst.org/home |
| The Oil Care Campaign | http://oilcare.org.uk/ |