Arboricultural Impact Assessment (including Tree Survey)

Former Goldthorpe Colliery, Barnsley

Report reference: AR-4145-02-C
March 2020

Report Title:	Arboricultural Impact Assessment Former Goldthorpe Colliery, Barnsley
Report Reference:	AR-4145-02-C
Written by	Laura Buckley BA(Hons) Dip LA CMLI MSc Arb & Urb For TechArborA
Technical review:	Victoria Black FdSc Arb Principal Arboricultural Consultant
QA review:	Victoria Black FdSc Arb Principal Arboricultural Consultant
Approved for issue	Victoria Black FdSc Arb Principal Arboricultural Consultant
Date	17.03.20

Unit A, 1 Station Road, Guiseley, Leeds, LS20 8BX
Phone: **01943 884451**
01943 879129
Email:admin@brooks-ecological.co.uk
www.brooks-ecological.co.uk
Registered in England Number 5351418

Contents

Contents	2
Summary statement	2
Introduction	3
Impact schedule	3
Implications for retained trees	12
Trees to be removed	14
Mitigation	15
Tree Survey AR-4145-01	16
Appendix 1 Tree Survey including Tree Constraints Plan - DR-4145-01	38
Appendix 2 Tree Protection Plan DR-4145-02-C	39

Summary Statement

The Site is associated with the former Goldthorpe Colliery in Goldthorpe village, Barnsley. Trees surveyed are located mainly in a belt alongside Kingsmark Way and a small number to the west side of the Site. A large group of trees and bushes is situated along the southern edge of the Site along a disused rail cutting (G6). Seventy-nine individual trees and six tree groups were surveyed. The individual trees were assessed as mainly low quality (52%) and moderate quality (43%). Two trees were identified as high quality and a further two trees as unviable for more than ten years. The tree belt is congested with most of the trees here having restricted space to grow.

The scheme has been designed to retain the majority of the individual trees surveyed. The tree group G6 should be protected during construction and tree protection barriers are recommended to protect tree canopies, stems and root protection areas during the works. Four trees and two tree groups (both of 2 trees) would require removal. Tree planting is proposed as part of the scheme.

This report should be read in conjunction with the attached Tree Constraints Plan Ref: D-4145-01 and Tree Protection Plan DR-4145-02-C.

Introduction

Purpose of the report

1. This report has been commissioned to provide professional independent, detailed arboricultural advice on relevant trees present at the former Goldthorpe Colliery Site, Barnsley.

2. A development layout plan has been provided to enable an impact assessment of the proposed works on the existing relevant trees within the Site. The Site Layout reference number is SK656-PL-01 Rev. R. The development proposals comprise houses with gardens, screen walling, fencing, access roads, public open space with tree planting, and uses the existing access point off Kingsmark Way.

Impact Schedule

The following schedule identifies the individual tree and its retention category with the main feature(s) of the proposed works likely to cause an impact. The tree references are shown on the tree constraints plan and the tree protection plan. Any mitigation measures are noted.

Tree ref.	Species	Retention category	Proposal feature	Impact	Mitigation
T1	Rowan	B 2	Access road. Landscaping.	Retain.	Tree protection barrier to BS 5837: 2012.
T2	Ash	C 2	Access road. Landscaping.	Retain.	Tree protection barrier to BS 5837: 2012.
T3	Ash	C 2	Access road. Landscaping.	Retain.	Tree protection barrier to BS 5837: 2012.

Tree ref.	Species	Retention category	Proposal feature	Impact	Mitigation
T4	Ash	C 2	Access road. Landscaping.	Retain.	Tree protection barrier to BS 5837: 2012.
T5	Ash	U	Access road. Landscaping.	Retain.	Tree protection barrier to BS 5837: 2012.
T6	Ash	C 2	Access road. Landscaping.	Retain.	Tree protection barrier to BS 5837: 2012.
T7	Ash	C 2	Access road. Landscaping.	Retain.	Tree protection barrier to BS 5837: 2012.
T8	Alder	C 2	Access road. Landscaping.	Retain. Root protection area (RPA) is at edge of the drive.	Tree protection barrier to BS 5837: 2012.
T9	Silver birch	C 2	Access road. Landscaping.	Retain.	Tree protection barrier to BS 5837: 2012.
T10	Lime	B 2	Access road. Landscaping.	Retain.	Tree protection barrier to BS 5837: 2012.
T11	Silver birch	B 2	Access road. Landscaping.	Retain.	Tree protection barrier to BS 5837: 2012.
T12	Silver birch	B 2	Access road. Landscaping.	Retain.	Tree protection barrier to BS 5837: 2012.
T13	Silver birch	B 2	Access road. Landscaping.	Retain.	Tree protection barrier to BS 5837: 2012.

Tree ref.	Species	Retention category	Proposal feature	Impact	Mitigation
T14	Silver birch	B 2	Access road. Landscaping.	Retain.	Tree protection barrier to BS 5837: 2012.
T15	Lime	B 2	Access road.	Retain.	Tree protection barrier to BS 5837: 2012.
T16	Oak	A 2	Access road.	Retain.	Tree protection barrier to BS 5837: 2012.
T17	Sycamore	B 2	Access road.	Retain.	Tree protection barrier to BS 5837: 2012.
T18	Sycamore	A 2	Access road.	Retain.	Tree protection barrier to BS 5837: 2012.
T19	Sycamore	B 2	Access road.	Retain.	Tree protection barrier to BS 5837: 2012.
T20	Sycamore	C 2	Access road.	Retain.	Tree protection barrier to BS 5837: 2012.
T21	Sycamore	B 2	Access road. BCP	Retain. Drive layout accommodates RPA. Small area (5-6%) of RPA edge for construction of paving.	Tree protection barrier to BS 5837: 2012.
T22	Sycamore	B 2	Access road.	Retain.	Tree protection barrier to BS 5837: 2012.
T23	Ash	C 2	Access road.		

Tree ref.	Species	Retention category	Proposal feature	Impact	Mitigation
T24	Ash	C 2	Access road.	Retain.	Tree protection barrier to BS 5837: 2012.
T25	Ash	C 2	Access road.	Retain.	Tree protection barrier to BS 5837: 2012.
T26	Ash	C 2	Access road.	Retain.	Tree protection barrier to BS 5837: 2012.
T27	Ash	C 2	Access road.	Retain.	Tree protection barrier to BS 5837: 2012.
T28	Ash	C 2	Access road.	Retain.	Tree protection barrier to BS 5837: 2012.
T29	Ash	C 2	Access road. (Landscaping frontage)	Retain.	Tree protection barrier to BS 5837: 2012.
T30	Ash	C 2	Access road.	Retain. Canopy overhangs drive by approx 1m, though no impact expected.	Tree protection barrier to BS 5837: 2012.
T31	Alder	C 2	Access road (Landscaping frontage)	Retain.	Tree protection barrier to BS 5837: 2012.
T32	Alder	C 2	Access road (Landscaping frontage)	Retain.	Tree protection barrier to BS 5837: 2012.
T33	Alder	C 2	Access road	Retain.	Tree protection barrier to BS 5837: 2012.

Tree ref.	Species	Retention category	Proposal feature	Impact	Mitigation
			(Landscaping frontage)		
T34	Silver birch	B 2	Access road	Retain.	Tree protection barrier to BS 5837: 2012.
T35	Silver birch	C 2	Access road	Retain.	Tree protection barrier to BS 5837: 2012.
T36	Silver birch	C 2	Access road	Retain.	Tree protection barrier to BS 5837: 2012.
T37	Silver birch	B 2	Access road	Retain.	Tree protection barrier to BS 5837: 2012.
T38	Silver birch	C 2	Access road	Retain. Canopy overhangs drive by approx 1m, though no impact expected.	Tree protection barrier to BS 5837: 2012.
T39	Silver birch	U	Access road	Retain.	Tree protection barrier to BS 5837: 2012.
T40	Silver birch	C 2	1.8m screen wall	Retain. Canopy overhangs by approx 1m, though no impact expected.	Tree protection barrier to BS 5837: 2012.
T41	Sycamore	C 2	1.8m screen wall	Retain.	Tree protection barrier to BS 5837: 2012.
T42	Sycamore	B 2	1.8m screen wall	Retain.	Tree protection barrier to BS 5837: 2012.
T43	Lime	B 2	1.8m screen wall	Retain.	Tree protection barrier to BS 5837: 2012.

Tree ref.	Species	Retention category	Proposal feature	Impact	Mitigation
T44	Oak	B 2	1.8m screen wall	Retain. Canopy overhangs wall by plot 17 by approx 1m, though no impact expected.	Tree protection barrier to BS 5837: 2012.
T45	Oak	B 2	1.8m screen wall	Retain. Canopy overhangs wall by plot 17 by approx 1m, though no impact expected.	Tree protection barrier to BS 5837: 2012.
T46	Sycamore	B 2	1.8m screen wall	Retain.	Tree protection barrier to BS 5837: 2012.
T47	Sycamore	B 2	1.8m high screen wall.	Retain.	Tree protection barrier to BS 5837: 2012.
T48	Sycamore	C 2	1.8m high screen wall.	Retain.	Tree protection barrier to BS 5837: 2012.
T49	Sycamore	C 2	1.8m high screen wall.	Retain.	Tree protection barrier to BS 5837: 2012.
T50	Sycamore	C 2	1.8m high screen wall	Retain. Canopy overhangs drive by approx 1m, though no impact expected.	Tree protection barrier to BS 5837: 2012.
T51	Silver birch	C 2	1.8m high screen wall at plot 9.	Removal.	Off-set tree planting.
T52	Ash	C 2	1.8m high screen wall.	Retain. Canopy overhangs wall by approx 1m, though no impact expected.	Tree protection barrier to BS 5837: 2012.
T53	Ash	C 2	1.8m high screen wall.	Retain.	Tree protection barrier to BS 5837: 2012.

Tree ref.	Species	Retention category	Proposal feature	Impact	Mitigation
T54	Alder	C 2	1.8m high screen wall.	Retain.	Tree protection barrier to BS 5837: 2012.
T55	Silver birch	C 2	1.8m high screen wall.	Retain.	Tree protection barrier to BS 5837: 2012.
T56	Ash	C 2	1.8m high screen wall.	Retain.	Tree protection barrier to BS 5837: 2012.
T57	Silver birch	C 2	1.8m high screen wall.	Retain.	Tree protection barrier to BS 5837: 2012.
T58	Ash	C 2	1.8m high screen wall.	Retain.	Tree protection barrier to BS 5837: 2012.
T59	Ash	C 2	1.8m high screen wall.	Retain.	Tree protection barrier to BS 5837: 2012.
T60	Lime	B 2	1.8m high screen wall.	Retain.	Tree protection barrier to BS 5837: 2012.
T61	Ash	B 2	1.8m high screen wall.	Retain. Canopy overhangs wall by approx 1m, though no impact expected.	Tree protection barrier to BS 5837: 2012.
T62	Alder	B 2	1.8m high screen wall.	Retain.	Tree protection barrier to BS 5837: 2012.
T63	Silver birch	B 2	Access road and car parking.	Retain.	Tree protection barrier to BS 5837: 2012.
T64	Silver birch	B 2	Access road and car parking.	Retain.	Tree protection barrier to BS 5837: 2012.
T65	Silver birch	C 2	Access road and car parking.	Retain.	Tree protection barrier to BS 5837: 2012.

Tree ref.	Species	Retention category	Proposal feature	Impact	Mitigation
T66	Silver birch	B 2	Access road and car parking.	Retain.	Tree protection barrier to BS 5837: 2012.
T67	Silver birch	C 2	Access road and car parking.	Retain.	Tree protection barrier to BS 5837: 2012.
T68	Oak	B 2	Access road and car parking.	Retain.	Tree protection barrier to BS 5837: 2012.
T69	Sycamore	B 2	Access road and car parking.	Retain.	Tree protection barrier to BS 5837: 2012.
T70	Sycamore	B 2	Access road and car parking.	Retain.	Tree protection barrier to BS 5837: 2012.
T71	Sycamore	B 2	Access road and car parking.	Retain.	Tree protection barrier to BS 5837: 2012.
T72	Sycamore	C 2	Access road and car parking.	Retain.	Tree protection barrier to BS 5837: 2012.
T73	Sycamore	B 2	Access road and car parking.	Retain.	Tree protection barrier to BS 5837: 2012.
T74	Ash	B 2	1.8m high screen wall.	Retain.	Tree protection barrier to BS 5837: 2012.
T75	Ash	C 2	1.8m high screen wall.	Retain.	Tree protection barrier to BS 5837: 2012.
T76	Ash	B 2	1.8m high screen wall.	Retain.	Tree protection barrier to BS 5837: 2012.
T77	Silver birch	B 2	1.8m screen wall for plots 4 and 5.	Removal.	Off-set tree planting.

Tree ref.	Species	Retention category	Proposal feature	Impact	Mitigation
T78	Silver birch	C 2	Gardens of house plots 31 and 32 – ground level changes.	Removal.	Off-set tree planting.
T79	Hawthorn	B 2	Gardens for plots 50 and 51 and ground level changes.	Removal.	Off-set tree planting.
G1	Ash Lime Silver birch	C 2	1.8m high screen wall.	Retain.	Tree protection barrier to BS 5837: 2012. Hand-dig only for fence post foundations if retained.
G2	Hawthorn	B 2	Access road and car parking.	Retain.	Tree protection barrier to BS 5837: 2012.
G3	Hazel Elder	C 2	1.8m high screen wall.	Retain.	Tree protection barrier to BS 5837: 2012.
G4	Silver birch x2	C 2	House plot 32 and rear garden – ground level changes.	Removal.	Off-set tree planting.
G5	Goat willow X2	C 1	House plot 51 and level changes.	Removal.	Off-set tree planting.
G6	Hawthorn Silver birch Oak Apple Cherry Sycamore	B 2	Landscaping and possible easement works.	None expected.	Retain and protect with Tree protection barrier to BS5837:2012 and use of existing fence.

Implications for retained trees

Tree protection

3. It is expected that all of the trees except four trees and two small tree groups can be retained within the proposed residential development at the Site.

4. Trees and tree groups retained should be protected from unwanted damage during construction works with temporary tree protection barriers. The barriers should be erected to the outer edge of the tree canopy or the edge of the RPA, whichever is the furthest away from the tree, unless otherwise indicated on the Tree Protection Plan. The belt of trees beside Kingsmark Way should be protected with the tree barrier at the back of the footway Site boundary and as close as possible to the proposed access road, car parking and screen walling.

5. Tree protection barriers should be the default specification for protective barrier, Figure 2, BS 5837: 2012 Trees in relation to design, demolition and constructions – Recommendations. Where Site circumstances prevent the use of the default barrier, an alternative specification would be recommended by the project arboriculturist with agreement of the local planning authority. The recommended locations for tree protective barriers are shown in Appendix 2 Tree Protection Plan.

6. All-weather notices should be attached to the barrier with words such as: "Construction exclusion zone – no access".

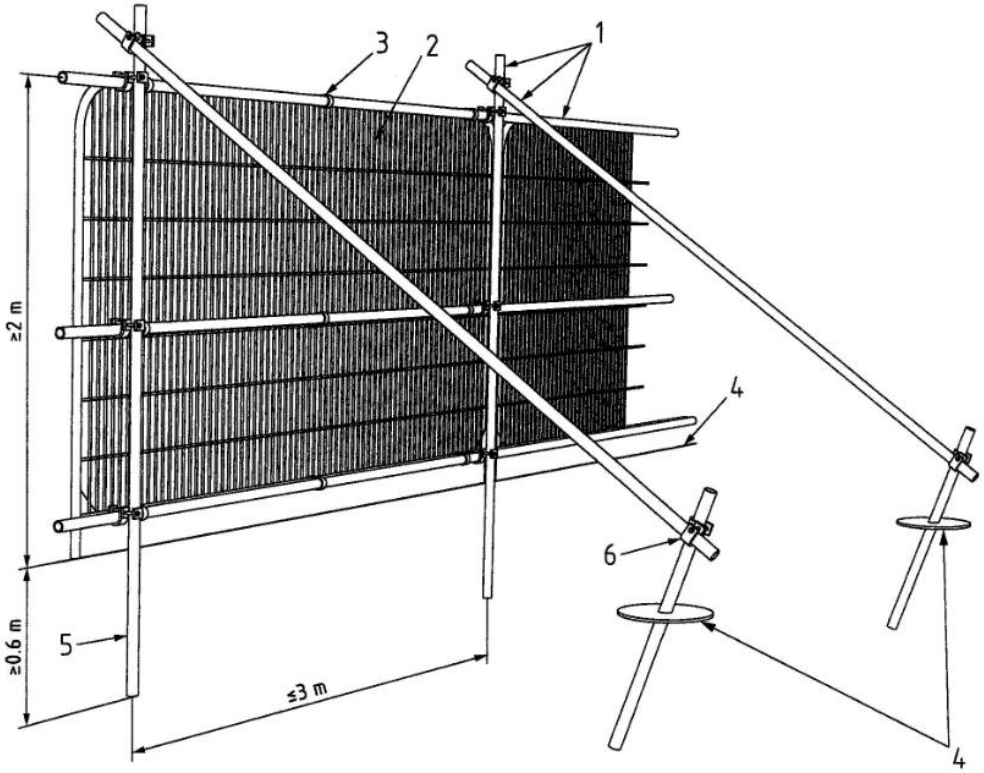

Key

1 Standard scaffold poles
2 Heavy gauge 2 m tall galvanized tube and welded mesh infill panels
3 Panels secured to uprights and cross-members with wire ties
4 Ground level
5 Uprights driven into the ground until secure (minimum depth 0.6 m)
6 Standard scaffold clamps

Figure 1

Tree work

7. Where pruning work is necessary and authorised to roots or branches of retained trees to enable facilitation works, it should be carried out by a competent contractor in accordance with BS 3998: 2010 Tree Works – Recommendations.

8. A small number of trees including T30, T38, T40, T44, T45, T50, T52 and T61 would overhang the proposed 1.8m screen wall however their canopy clearances on this side are 2.5m or more and no canopy pruning work is expected.

9. Roots smaller than 25mm diameter may be pruned back where necessary, making a clean cut with a suitable sharp tool, except where they occur in clumps. Roots in clumps or larger than 25mm diameter should be severed only following consultation with an Arboriculturist, as such roots may be essential to the health and stability of the tree.

Demolition

10. Demolition is not expected within the proposed Site works.

11. *Drainage and utilities*

12. Drainage and utilities are expected to be included within the proposed Site works and should not involve digging or trenching within RPA's. An easement runs along the south side of the Site through part of G6 though no work is expected.

Trees to be removed

13. Four trees (T51, T77, T78 and T79) and two small tree groups (G4 and G5) are assessed as to be removed for the proposed residential development.

14. The tree removals would be mainly due to building footprint, ground level changes in the west side and the screen wall on the east side. The retention of the majority of the Kingsmark Way tree belt would renders the removal of T77 at the end

of this belt less noticeable. The removal of T77, T78 and T79 in addition to G4 and G5 on the west side of the Site would be expected to be less discernible, particularly as seen from Kingsmark Way.

Mitigation

15. For the proposed tree planting to off-set the three trees and one small group removed it is recommended that a variety of tree species are chosen for interest and to mitigate for potential tree pests and diseases.

16. The development scheme includes further tree planting to enhance visual amenity and improve wildlife potential. Trees closer to buildings are likely to be small to medium-sized trees, such as: field maple varieties (*Acer campestre* var.), alder varieties (*Alnus glutinosa* var.), serviceberry (*Amelanchier arborea* Robin Hill), birch varieties, hawthorn (*Crataegus monogyna*), holly varieties, crabapple (*Malus* 'Golden Hornet') and Cherry plum (*Prunus cerasifera* 'Nigra'). Where space permits planting of goat willow (Salix capraea) is recommended for its habitat potential.

TREE SURVEY AR-4145-01

Tree Survey Contents

Contents 16
Summary statement 16
Introduction 17
Tree date abbreviations and survey methodology 19
Tree data 22
Findings 34

Appendix 1 Tree Survey including Tree Constraints Plan - DR-4145-01 39

Summary Statement

The Site is associated with the former Goldthorpe Colliery in Goldthorpe village, Barnsley. Trees surveyed are located mainly in a belt alongside Kingsmark Way and a small number to the west side of the Site. A large group of trees and bushes is situated along the southern edge of the Site along a disused rail cutting.

Seventy-nine individual trees and six tree groups were surveyed. The individual trees were assessed as mainly low quality (52%) and moderate quality (43%). Two trees were identified as high quality and a further two trees as unviable for more than ten years). The tree belt is congested with most of the trees here having restricted space to grow.

This report updates an earlier report (Preliminary Tree Survey and Arboricultural Assessment, June 2017 by Brooks Ecological Ltd.)

Introduction

Purpose of the report

1. This report has been commissioned to provide professional independent, detailed arboricultural advice on all relevant trees present at the former Goldthorpe Colliery at Goldthorpe village, Barnsley.

2. This report has been undertaken in accordance with BS 5837:2012 Trees in relation to construction – Recommendations.

3. The client has provided a topographical plan (reference: S9378, April 2019).

4. All findings and recommendations are based on visual observations conducted from ground level during the Site visit only. No other diagnostic procedures were used to establish any extent of internal decay nor was a climbing inspection undertaken.

5. All measurements were obtained with the use of a clinometer and an electronic distometer. On occasion it is not viable to provide accurate measurements due to restricted access or other mitigating circumstances on site, and the data may be estimated.

Legal implications of work to trees

6. Due to the potentially large penalties for illegally carrying out work to protected trees, it is recommended that a check with the local planning authority is carried out prior to any tree works being undertaken and any required consents such as for work to trees with Tree Preservation Orders and/or Conservation Areas are obtained before work to trees on site. Additionally, work to trees at certain times of the year may contravene sections of the Wildlife and Countryside Act regarding nesting and roosting of protected species.

7. Every tree owner has a general duty of care to ensure their tree(s) does not pose an unacceptable risk to other people on or adjacent to their land. The landowner will only be liable for injury or damage caused by trees if they are found to be negligent.

8. There is no legal obligation for a tree owner to cut back growth from a neighbouring property. However, under Common law of tort of nuisance, an affected neighbour has the right to cut back roots or branches that encroach onto a neighbouring property back to the boundary of the land owned by the person abating the nuisance without the neighbour's consent (with the exception of TPO's or CA's). The person abating the nuisance has a duty to exercise reasonable care in carrying out work as a failure to do so may lead to liability in negligence (for example where removal of roots makes a tree unstable).

9. A search of Barnsley Council website (https://barnsley .gov.uk) on 12.06.19 found no trees with TPO on the Site.

Site description

10. The Site is located in the settlement of Goldthorpe, within the Metropolitan Borough of Barnsley. The Site is a disused, brownfield Site associated with the Goldthorpe Colliery. The Site is generally bounded by residential land-use, including allotment gardens to the north side. To the south side of the Site runs a disused railway line. Kingsmark Way runs along the eastern side while light industrial buildings sit to the west of the Site. A section of public right of way passes through the south-east corner of the Site. There is an existing access point into the Site off Kingsmark Way.

11. The topography of the Site is gently sloping down to the south with a difference in elevation of around 9m. The belt of trees along Kingsmark Way is located on a small bank, typically one metre depth and one and a half metres width, from the road down to the Site.

12. Offsite trees are located inside the grounds of the Dearne and District Junior Football Club on the opposite side of Kingsmark Way and comprise approximately eight mature ash trees. Mature trees beyond the football ground to the east are evident. A small number of garden trees and shrubs are evident to the east in Meltonfield and Thornham Meadows. Open countryside is visible in longer views south from the Site.

Survey conditions

13. The trees were surveyed in cool, damp conditions on 11th June 2019.

Tree data abbreviations and survey methodology

T	Tree	GL	Ground level
G	Tree group	MS	Multi-stemmed
H	Hedge	AFP	Access facilitation pruning
OSB	Outside Site boundary	Ave	Average dimension
#/est	Estimated dimension	Typ	Typical dimension
N	North	E	East
S	South	W	West
Min	Minimum	Lwr	Lower
adj	Adjacent	Ht	Height

14. The trees were assessed visually from ground level. Where access to a tree is restricted this is noted in the schedule.

15. The tree reference numbers refer to the attached Tree Constraints Plan (TCP) references. The trees were not tagged for this survey.

16. The tree species is listed by common name in the schedules, with a key to scientific names below:

Common name	Botanical name	Common name	Botanical name
Alder (common)	*Alnus glutinosa*	Goat willow	*Salix caprea*
Alder (grey)	*Alnus incana*	Hawthorn	*Crataegus monogyna*
Apple	*Malus domestica*	Hazel	*Corylus avellana*
Aspen	*Populus tremula*	Holly	*Ilex aquifolium*
Ash	*Fraxinus excelsior*	Hornbeam	*Carpinus betulus*
Beech	*Fagus sylvatica*	Larch	*Larix decidua*
Birch (silver)	*Betula pendula*	Lime (common)	*Tilia x europaea*
Birch (downy)	*Betula pubescens*	Lime (small-leaved)	*Tilia cordata*
Chestnut (sweet)	*Castanea sativa*	Maple (field)	*Acer campestre*
Chestnut (horse)	*Aesculus hippocastanum*	Maple (Norway)	*Acer platanoides*

Cherry (wild)	*Prunus avium*	Poplar (black)	*Populus nigra*
Cherry (bird)	*Prunus padus*	Oak (sessile)	*Quercus petraea*
Cherry (Japanese)	*Prunus serrulata*	Oak (pendunculate)	*Quercus robur*
Cherry plum	*Prunus cerasifera*	Rowan/mountain ash	*Sorbus aucuparia*
Leyland Cypress	*X Cupressocyparis leylandii*	Sycamore	*Acer pseudoplatanus*
Elm (English)	*Ulmus procera*	Weeping willow	*Salix chrysocoma*
Elm (wych)	*Ulmus glabra*	Whitebeam (Swedish)	*Sorbus intermedia*

17. Measurement of the existing height above ground level of the first significant branch and the direction of growth and the height of the canopy. This informs ground clearance, crown/stem ratio and shading.

18. The stem/trunk diameter is measured with a diameter tape at 1.5m from ground level around the stem for single stem trees and for multi-stemmed trees and other variants in accordance with Annex C of the British Standard. Where access restricts measurement of the tree, an estimate has been made, denoted by '#'.

19. Canopy spread is measured with an electronic distometer. The close-spacing of some of the trees impeded measurements of canopy spread and height and estimates were made.

20. The age of the tree is based on the typical longevity of the particular tree species. The age classes are: young (Y), semi-mature (SM), early mature (EM), mature (M), over-mature (OM) and veteran (V).

21. The physiological condition of the tree is an assessment of its likely health, vigour and stress. The classes for physiological condition are: good, fair, poor and dead.

22. Structural condition includes tree form, visible defects, irregularities and influencing factors.

23. Preliminary management recommendations note work (with prior approval where necessary) to promote the health and longevity of the tree and/or improve safety and/or increase habitat potential.

24. The life expectancy (life exp.) is the estimated remaining contribution in years, (<10, 10+, 20+, 40+).

25. The retention category (ret cat) for each tree is assessed in accordance with BS 5837: 2012 Table 1, summarised as below:

Category A	Trees of high quality with an estimated remaining life expectancy (ERC) of at least 40 years. Green canopy outline on plan.
Category B	Trees of moderate quality with an estimated ERC of at least 20 years. Blue canopy outline on plan.
Category C	Trees of low quality with an ERC of at least 10 years, OR young trees with a stem diameter below 150mm. Grey canopy outline on plan.
Category U	Trees in such a condition that they cannot realistically be retained as living trees in the context of the current land use for longer than 10 years. Trees unsuitable for retention. Dark red canopy outline on plan.

26. Sub- categories of 1, 2 or 3 are included in the tree data tables and are defined as follows:

Sub-category 1 trees are those with 'mainly arboricultural value'

Sub-category 2 trees are those with 'mainly landscape value'

Sub-category 3 trees are those with 'mainly cultural or conservation value'.

27. The root protection area (RPA) in m² is for layout purposed and indicates the 'minimum area around a tree deemed to contain sufficient roots and rooting volume to maintain the tree's viability, and where the protection of the roots and soil structure is treated as a priority'. The RPA is calculated in accordance with BS 5837: 2012 Annex D. Where Site features are likely to have distorted the typical RPA, a polygon of the same area is estimated on plan to reflect a more realistic shape, in accordance with the British standard.

Tree data

28. The following schedule contains the tree data obtained on site:

Ref	Species	Life stage	Ht (m)	Can Ht (m)	Lowest branch	Stem diam (mm)	RPA (m²)	Canopy spread (m)	Physio logical	Structural condition	Recommendations	Life exp. (yrs)	Ret cat
T1	Rowan	M	9	0.5	<0.5m N	130 140 100	23	N 3.5 E 1.5 S 3.5 W 1.5	Good	Fair. Three stems and smaller stems from ground level. On a bank with informal path on N side. Pruning snags evident.	None at present.	20+	B 2
T2	Ash	M	9	3	3m S	215	23	N 3.5 E 3.5 S 3.5 W1.5	Fair	Fair. Crown lifted roadside. Calloused wounds. Some deadwood and snags.	None at present.	10-20	C 2
T3	Ash	EM	9	2	2.5m SW	175	14	N 2 E 1 S 3 W 2.5	Fair	Fair. Deadwood evident.	None at present.	10-20	C 2
T4	Ash	EM	7	2	2.5m E	80 80	7	N 1 E 3.5 S 1 W 3.5	Fair	Poor. Fork at 1.5m also with a small decaying stump. Bark damage and snags. Two crowns due to fork.	None at present.	10	C 2
T5	Ash	EM	9	1	<0.5m S	90	5	N 1.5 E 4 S 1 W 3.5	Fair	Poor. Wide fork at ground level. Bark damage and snags. Two crowns due to fork.	Consider removal.	<10	U
T6	Ash	EM	9	2 (W)	2m N	175	14	N 1.5 E 1 S 1.5 W 3	Fair	Fair. Snags at 1m with decay. Deadwood on E side of crown.	Monitor extent of decay in stubs.	10+	C 2
T7	Ash	EM	9	1	3m W	115 110	10	N 1 E 3.5 S 1 W 2	Fair	Poor. Fork at 0.4m with bark included. Crossing and rubbing branches form a brace. Decayed prune wound at 0.4m S and W.	Monitor condition of fork.	10-20	C 2

Ref	Species	Life stage	Ht (m)	Can Ht (m)	Lowest branch	Stem diam (mm)	RPA (m²)	Canopy spread (m)	Physio logical	Structural condition	Recommendations	Life exp. (yrs)	Ret cat
T8	Alder	M	9	<0.5	1.8m E N	200 150#	28	N 1 E 3.5 S 1 W 3	Fair	Poor. Multi-stem with 2 larger and three smaller stems from GL. Prune wounds including a small stem cavity 0.5m E side,	Monitor extent of stem cavity and sign of decay.	10+	C 2
T9	Silver birch	EM	8	2	3m W	125	7	N 1 E 1 S 1 W 1	Fair	Poor. Leans N slightly. Small canopy.	None at present.	10-20	C 2
T10	Lime	EM	8	<0.5	2.5m NE	165	14	N 1.5 E 3 S 1 W 1.5	Fair	Fair. Multi-stem at ground level with two other stems pruned back <1m to stumps. Epicormic shoots.	None at present.	20+	B 2
T11	Silver birch	M	12	2.5	2.5m SW	160	10	N 2 E 2 S 2 W 2#	Fair	Fair. High main canopy. Some pruning snags.	None at present.	20+	B 2
T12	Silver birch	M	8.5	1.2	1.5m W	155	10	N 1.5 E 1.5 S 1.5 W 2.5	Fair	Fair. Canopy bias W and crown lifted. Mostly calloused wounds. Calloused bark damage 0.5m E side of stem.	None at present.	20+	B 2
T13	Silver birch	M	9	1	1m NW	165	14	N 1.5 E 1.5 S 1.5 W 1.5	Fair	Fair. Maiden form.	None at present.	20+	B 2
T14	Silver birch	M	9	2	3m S	215	23	N 3 E 3 S 3 W 3	Good-fair	Good-fair. At footway edge. Some small pruning snags with heartwood exposed.	None at present.	20+	B 2
T15	Lime	EM-M	8	0.5	1.5m S	150 140 50	18	N 3 E 3.5 S 2 W 2.5	Good	Fair. Three stems from 0.5m with forks above. Dense canopy.	None at present.	20+	B 2

Ref	Species	Life stage	Ht (m)	Can Ht (m)	Lowest branch	Stem diam (mm)	RPA (m²)	Canopy spread (m)	Physio logical	Structural condition	Recommendations	Life exp. (yrs)	Ret cat
T16	Oak	EM	8	2.5	1m W	280	34	N 4 E 1.5 S 0.5 W 3	Fair	Fair. Deadwood in lower canopy. Forks at 2m 3.5m. Pruning snags. Bias NW. Restricted space.	None at present.	40+	A 2
T17	Sycamore	EM	9	5	5m W	185	14	N 2 E 1.5 S 2.5 W 2.5	Good	Fair. Maiden form, high canopy. Small stem snags. Bias W.	None at present.	20+	B 2
T18	Sycamore	M	12	3	2.5m NE	310	41	N 3 E 5 S 3 W 1.5	Good	Good. Larger tree, beside footway. Calloused bark wounds. Crown bias E. Trifurcates at 3m.	None at present.	40+	A 2
T19	Sycamore	M	12	1	1m NW	280	34	N 3# E 5 S 3 W 3	fair	Fair. Side branch at 1m NW of main stem. Small pruning wounds.	None at present.	20+	B 2
T20	Sycamore	EM	10	3	2m N	210	18	N 2 E 5 S 2 W 3#	fair	Fair. Small (<5cm diameter) pruning wounds on stem. Longevity restricted by overcrowding	None at present.	10+	C 2
T21	Sycamore	M	10	<0.5	0.5m W	330 325	102	N 2.5 E 2.5 S 3 W 3	Good	Fair-poor. Fork just above GL with bark included and no natural bracing above apparent. Pruning wounds	Monitor condition of fork for failure in strong winds.	20+	B 2
T22	Sycamore	M	9	3	3m SE	225	23	N 3 E 2.5 S 2.5 W 1	Good	Good. Part-calloused crown lifting wounds. Limited W.	None at present.	20+	B 2
T23	Ash	EM	9	2.5	2.5m E	200	18	N 2 E 3.5 S 2 W 2.5	Fair	Good. Fork at 3m. Part-calloused pruning wounds. Restricted canopy.	None at present.	10-20	C 2

Ref	Species	Life stage	Ht (m)	Can Ht (m)	Lowest branch	Stem diam (mm)	RPA (m²)	Canopy spread (m)	Physio logical	Structural condition	Recommendations	Life exp. (yrs)	Ret cat
T24	Ash	EM	9.5	3	Not clear	175	14	N 1.5 E 1.5 S 1.5 W 2.5#	fair	Fair. High canopy. Crown bias W. Fork at 2m. Limited access.	None at present.	10-20	C 2
T25	Ash	EM	9.5	2.7	3m E	170	14	N 0.5 E 3 S 3 W 2.5	Fair	Fair. Fork at 2m and dead branch at same point on stem. Part-calloused wounds and small branch snag with regrowth.	None at present.	10-20	C 2
T26	Ash	EM	9.5	3.5	4.5m W	170	14	N 1 E 0 S 1 W 3	Fair	Fair. Deadwood in lower canopy. Restricted canopy.	None at present.	10-20	C 2
T27	Ash	SM	9	2.7	3m E	110	5	N 1 E 1 S 1 W 1	Fair	Fair. Deadwood in lower canopy. Small pruning snags up stem. Very restricted.	Consider removal in favour of adjacent trees.	10+	C 2
T28	Ash	EM	9	5+	3m W	135	7	N 0.5 E 1 S 0.5 W 2.5	Fair	Fair. Fork at 3m. Small, high canopy.	None at present.	10+	C 2
T29	Ash	EM	9	2	3m E	120	7	N 0 E 3 S 1 W 1	Fair	Fair. Bias E due to T30.	None at present.	10+	C 2
T30	Ash	EM	9	2	1.5m W	200	18	N 1 E 1.5 S 2 W 3	Fair	Fair. Deadwood in lower canopy. Fork at 2,5m - quite tight.	None at present.	10-20	C 2
T31	Alder	M	10	3.5	3.5m E	225	23	N 3.5 E 4 S 3.5 W 0	Good	Fair-poor. Lime bush at base. Slightly kinked stem to E and leans away from T32.	None at present.	10-20	C 2

Ref	Species	Life stage	Ht (m)	Can Ht (m)	Lowest branch	Stem diam (mm)	RPA (m²)	Canopy spread (m)	Physio logical	Structural condition	Recommendations	Life exp. (yrs)	Ret cat
T32	Alder	EM-M	9.5	1.5	1.5m S	185	14	N 1 E 2 S 0.5 W 0.5	Good-fair	Fair-poor. Slightly kinked stem and restricted canopy. Couple of low branches then a high canopy.	None at present.	10-20	C 2
T33	Alder	EM-M	8.5	5	5m S	170	14	N 1 E 1 S 1 W 1	Fair	Fair. Two dead branches in lower canopy. Small, high canopy.	None at present.	10-20	C 2
T34	Silver birch	M	9	2	2m N	160	10	N 1.5 E 1.5 S 1.5 W 1.5	Fair	Fair. Maiden form. Small part-calloused prune wounds. Snags on stem <1m.	None at present.	10-20+	B 2
T35	Silver birch	M	8	Not clear	Not clear	150	10	N 1 E 1 S 1 W 2	Fair	Fair. Epicormic growth from ground level to 2m. Fork at 4m.	None at present.	10-20	C 2
T36	Silver birch	M	7.5	2.5	2.5m NE	145	10	N 1 E 1 S 1 W 1	Fair	Fair. Few pruning snags. Restricted canopy.	None at present.	10-20	C 2
T37	Silver birch	M	8	2	3m NESW	215	23	N 2 E 2.5 S 2 W 1.5	Fair	Good. Non-calloused pruning wounds and snags on stem. Maiden form.	None at present.	10-20+	B 2
T38	Silver birch	M	8	1.5	1m W	150	10	N 2 E 0.5 S 1.5 W 2.5	Fair	Good. Maiden form, apex of tree leans west.	None at present.	10-20	C 2
T39	Silver birch	EM	8	7+	Not clear	115	7	N 0.5 E 0.5 S 0.5 W 0.5	Poor	Poor. Small tree with restricted canopy.	Consider removal.	<10	U

Ref	Species	Life stage	Ht (m)	Can Ht (m)	Lowest branch	Stem diam (mm)	RPA (m²)	Canopy spread (m)	Physio logical	Structural condition	Recommendations	Life exp. (yrs)	Ret cat
T40	Silver birch	M	8	1	1m W	175	14	N 2 E 0.5 S 1 W 3	Fair	Fair. Crown bias to west.	None at present.	10-20	C 2
T41	Sycamore	M	10	3	3m E	225	23	N 2 E 4 S 2 W 0	Fair	Fair-poor. By footway. Epicormic shoots up stem to 2m. Calloused and part-calloused pruning wounds.	None at present.	10-20	C 2
T42	Sycamore	M	10	3.5	3m SE	300	41	N 1.5 E 4 S 2.5 W 2	Fair	Fair. By footway. Calloused and non-calloused pruning wounds. Four stems from 3m.	None at present.	20-40	B 2
T43	Lime	EM	9	Not clear	Not clear	110 110	10	N 2 E 2 S 2.5 W 2	Good	Fair. Fork at 1m. Ascending stems. Dense canopy.	None at present.	20-40	B 2
T44	Oak	EM	9.5	1 (N)	1m NW	230	23	N 2 E 1 S 1 W 4	Good	Fair. Small epicormic shoots on stem. Bias NW.	None at present.	20-40+	B 2
T45	Oak	EM	9.5	<0.5	1.8m W	260	28	N 0.5 E 0.5 S 0.2 W 4	Good	Fair. Branches on W side only. Pruning snag at 1.8m N. May have a girdling root on west side. Unbalanced canopy.	None at present.	20-40+	B 2
T46	Sycamore	M	10	3	3m E and W	290	41	N 2.5 E 4 S 2 W 3.5#	Good	Fair. Non and calloused pruning wounds. Tight fork evident at 2.5m. Restricted growth.	None at present.	20-40	B 2
T47	Sycamore	M	10	2.8	3m E	250	28	N 1.5 E 4.5 S 2 W4#	Good	Fair. Small, non-calloused pruning wounds. Restricted growth.	None at present.	20-40	B 2

Ref	Species	Life stage	Ht (m)	Can Ht (m)	Lowest branch	Stem diam (mm)	RPA (m²)	Canopy spread (m)	Physio logical	Structural condition	Recommendations	Life exp. (yrs)	Ret cat
T48	Sycamore	EM	9.5	2.8	2.8m E	125 145	18	N 1.5 E 3.5 S 1.5 W 2	Fair	Fair. Fork at 0.3m, tight though probably not bark-included.	None at present.	10-20+	C 2
T49	Sycamore	EM	10	3	3m E	225	23	N 1 E 3.5 S 1 W 2	Fair	Fair. Small, dead branches in lower canopy, snags also. Loose bark <1m S side of stem. One branch extends E. Dead branch at 0.2m.	None at present.	10-20	C 2
T50	Sycamore	M	9	0.5	<0.5m NESW	175 165	28	N 1.5 E 0 S 1.5 W 4	Fair	Fair-poor. Multi-stem from GL including 2 main stems; bark-included junctions with branch fusing above as a natural brace.	None at present.	10-20	C 2
T51	Silver birch	M	9	0.4	0.4m W	180	14	N 1 E 1 S 1 W 3	Fair	Fair. Bias west.	None at present.	10-20	C 2
T52	Ash	EM	8.5	0.5	1m W	105 95 75	10	N 1.5 E 1 S 1.5 W 3.5	Fair	Fair. Multi-stem tree. Bark-included junction near GL.	Monitor junction for failure after strong winds.	10-20	C 2
T53	Ash	EM	9	3	2.7m E	195	18	N 2 E 4.5 S 2 W 1.5	Fair	Fair. Thinnish canopy.	None at present.	10-20	C 2
T54	Alder	EM	7	3	3.5m E	155	10	N 1 E 3.5 S 1 W 0.5	Fair	Fair. Minor epicormic growth on stem.	None at present.	10-20	C 2

Ref	Species	Life stage	Ht (m)	Can Ht (m)	Lowest branch	Stem diam (mm)	RPA (m²)	Canopy spread (m)	Physio logical	Structural condition	Recommendations	Life exp. (yrs)	Ret cat
T55	Silver birch	EM	8	2.8	3m N	145	10	N 1.5 E 1.5 S 1.5 W1.5	Fair	Fair. Non and part-calloused pruning wounds. Maiden form.	None at present.	10-20	C 2
T56	Ash	EM	8.5	4.5	2.8m N	135	7	N 2.5 E 1 S 1 W 1.5	Fair	Fair. Non and part-calloused pruning wounds. Maiden form. High canopy.	None at present.	10-20	C 2
T57	Silver birch	M	10	2.8	3.5m E	165	14	N 0.5 E 2.5 S 1 W 1	Fair	Fair. Non and part-calloused pruning wounds. Deadwood mid stem.	None at present.	10-20	C 2
T58	Ash	EM	10	2.8	2.8m E	145	10	N 1.5 E 4 S 2 W 0.5	Fair	Fair. Kinked stem with three branches from 4m. Deadwood in mid and lower canopy.	None at present.	10-20	C 2
T59	Ash	EM	10	6+	Not clear	125	7	N 1.5 E 1.5 S 1.5 W 1.5	Fair	Fair. Kinked stem with three branches from 4m. High canopy.	None at present.	10-20	C 2
T60	Lime	M	9	<0.5	0.5m NESW	250	28	N 2.5 E 2.5 S 2.5 W 2.5	Fair	Fair. Main stem has two pruned stems at 0.8m with regrowth.	None at present.	20-40	B 2
T61	Ash	SM	8	2#	1.8m W	175	14	N 1.5 E 1.5 S 1.5 W 3.5	Fair	Fair.	None at present.	10-20	B 2
T62	Alder	M	9	2	2m SW	285	34	N 3 E 3 S 3 W 3	Good	Good. Suckering growth from the base of tree. A few snags on stem.	None at present.	10-20+	B 2

Ref	Species	Life stage	Ht (m)	Can Ht (m)	Lowest branch	Stem diam (mm)	RPA (m²)	Canopy spread (m)	Physio logical	Structural condition	Recommendations	Life exp. (yrs)	Ret cat
T63	Silver birch	M	13	2.8	2.8m S	230	23	N 2.5 E 3.5 S 2.5 W2.5	Fair	Fair. Maiden form. Calloused, non and part-calloused pruning wounds.	None at present.	20-40	B 2
T64	Silver birch	M	11	0.5	<1m E	250	28	N 2 E 1.5 S 2.5 W 3	Good	Fair. Maiden form. Small branch fused into lower stem. Restricted space.	None at present.	20-40	B 2
T65	Silver birch	M	11	<0.5	0.8m W	150	10	N 1 E 1 S 1 W 3	Fair	Fair. Maiden form. Bias west.	None at present.	10-20	C 2
T66	Silver birch	M	11	<0.5	0.5m NE	200	18	N 1 E 3 S 1.5 W 3.5	Fair	Fair. Fork at 3.5m. Rounder, dominant tree.	None at present.	20-40	B 2
T67	Silver birch	EM	8	2	3m E	105 75	7	N 0 E 3.5 S 1.5 W 3.5	Fair	Poor. Two stems splay out west and east. Another stem pruned at GL east side. Snags. Under T67.	None at present.	10+	C 2
T68	Oak	EM	7	2	2m N	250	28	N 3.5 E 3 S 0 W 2	Fair	Fair. Bias N. No branches on S side. Minor deadwood in mid canopy.	None at present.	20-40	B 2
T69	Sycamore	M	8	3	3m NE	300 140	48	N 3.5 E 5 S 1.5 W 3.5	Fair	Fair. Fork at 1m. Non-calloused prune wounds on stem.	None at present.	20-40	B 2
T70	Sycamore	M	11	2	3m E	305 130	48	N 3 E 5 S 3 W 1.5	Fair	Fair. Prune wounds (<10cm diameter) on stem roadside. Low branch W at 0.8m. Calloused stem wound near GL south side.	None at present.	20-40	B 2

Ref	Species	Life stage	Ht (m)	Can Ht (m)	Lowest branch	Stem diam (mm)	RPA (m²)	Canopy spread (m)	Physio logical	Structural condition	Recommendations	Life exp. (yrs)	Ret cat
T71	Sycamore	M	11.5	1.5	1.5m W	290 180	55	N 2 E 5 S 2 W 4	Fair	Fair. Fork at 1m. Restricted space.	None at present.	20-40	B 2
T72	Sycamore	EM	10	5+	Not clear	150 95 40	14	N 1 E 1 S 1 W 1	Fair	Fair. Three stems with bark-included junctions from 0.2m. Low branch west <1m. Small, high canopy.	None at present.	10-20	C 2
T73	Sycamore	M	10	<0.5 (W)	<1m W	315	48	N 1 E 4.5 S 1.5 W 4.5	fair	Fair. Calloused and non-calloused pruning wounds. Low branching to the west.	None at present.	20-40	B 2
T74	Ash	M	10	1.5	2m SW	250	28	N 1.5 E 4 S 1.5 W 4	Fair	Fair. Low branch/stem just above ground level. Calloused and non-calloused prune wounds.	None at present.	20-40	B 2
T75	Ash	EM	9	0.5 (W)	2m W	190	18	N 1 E 4 S 1 W 4	Good	Fair. Calloused pruning wounds. Stems from ground level SW side. Deadwood in lower canopy.	None at present.	10-20	C 2
T76	Ash	M	9	1	1.8m W	150 160	23	N 1.5 E 4.5 S 4.5 W 4	Good	Good. Fork at 1m – alright. Minor deadwood in lower canopy.	None at present.	20+	B 2
T77	Silver birch	M	7.5	<0.5	0.4m S	290	41	N 4.5 E 4.5 S 4.5 W 4.5	Good	Good. Well-rounded crown (more space to develop).	None at present.	20+	B 2

Ref	Species	Life stage	Ht (m)	Can Ht (m)	Lowest branch	Stem diam (mm)	RPA (m²)	Canopy spread (m)	Physio logical	Structural condition	Recommendations	Life exp. (yrs)	Ret cat
T78	Silver birch	M	11.5	1.8	2.5m SW	270 340	81	N 3.5 E 4 S 3.5 W 3.5	Fair	Fair-poor. Twin stemmed from ground level. Possibly bark-included junction. Bark wound at 1m callousing. Lower branch has a swing attached. Beside back of Beever Street terrace.	Monitor condition of fork after strong winds.	10+	C 2
T79	Hawthorn	M	8#	<1	Not clear	Not measured	-	N 3# E 3# S 3# W3#	Good #	Fair#. No access due to undergrowth. Good dense foliage.	None at present.	20+	B 2
G1	Ash Lime Silver birch	EM	10	Not measured	<1m	<75	3	See plan	Fair	Fair. Small canopies and closely spaced stems.	Potential to thin out.	10+	C 2
G2	Hawthorn	M	6	<0.5	Not mea-sured	100 x3 typ.	14	See plan	Good	Fair. Bush-like and dense foliage. Some fused branching evident. Under birch trees.	None at present.	20+	B 2
G3	Hazel Elder	M	5	<0.5	Not meas-ured	Not meas-ured	-	See plan	Good	Good. Many, multi-stemmed bushes. Dense foliage.	None at present. Possible coppicing in winter.	10-20+	C 2
G4	Silver birch x2	M	11	1.5	Not meas-ured	230 each	23	See plan	Good	Fair. Two birch close together with balanced canopies. Slight lean at base but self-righting. Back of Beever street terrace.	None at present.	10-20	C 2
G5	Goat willow X2	M	11 #	<1m	Not meas-ured	Not meas-ured	-	See plan	Good	Fair. Two willows, multi-stemmed from ground level. No close access due to undergrowth.	None at present.	10+	C 1

Ref	Species	Life stage	Ht (m)	Can Ht (m)	Lowest branch	Stem diam (mm)	RPA (m²)	Canopy spread (m)	Physio logical	Structural condition	Recommendations	Life exp. (yrs)	Ret cat
G6	Hawthorn Silver birch Oak Apple Cherry Sycamore	EM typ	5 to 9 typ	<1	Not meas-ured	Not meas-ured	-	N E S W	Good typ	Fair to good typ. Located on very steep slope down to former railway line. Dense, mixed group. Collective value.	Close to Site boundary.	20-40+	B 2

Findings

Limitations

29. Limitations to the survey were some debris from fly-tipping on the bank with trees along Kingsmark Way, fences and thick undergrowth to the west side of the Site.

Tree descriptions and recommendations

30. The tree survey revealed a total of seventy-nine individual trees and six groups of trees. Most of the individual trees were assessed as either moderate quality (retention category B, 43%) or low quality (retention category C, 52%). There were two retention category A trees and two category U trees (unviable for more than ten years) identified within the site.

31. Of the tree groups surveyed, two groups were assessed as moderate quality and four groups as low quality.

32. It has been recommended that a small number of trees are monitored annually to assess if their condition is still acceptable; this includes the two category U trees and those with potentially weaker stem junctions (see paragraph 33 below).

33. It is apparent that trees T1 to T77 forming the tree belt alongside Kingsmark Way have not received management aside from pruning side branches. It is likely that the trees were planted at around the same time due to the practice for planting small blocks of the same species and at spacings of one to two metres. As the trees have grown, few if any, are likely to

have been thinned out (removed) thereby limiting the growing space available for each tree. At present, the trees have a clear tendency for canopies with an east and/or west bias, where more space and light are available. The closeness of trees to one another has limited the ability for each tree to move in the wind and consequently a number of trees have bark-included junctions, naturally braced above by fused branches/stems in some trees. Other trees have no natural bracing evident to support bark-included junctions. Should some trees from the belt be removed for development, it should be factored that removing the support from neighbouring trees, exposes potentially weaker trees to failure from strong winds. It is recommended that potential, necessary tree removal focuses on the lower quality trees (retention category C and U trees).

34. The high-quality trees surveyed are T16, an early mature oak, and T18, a mature sycamore. These trees are more likely to form dominant trees in the future due to longevity for species and current size respectively. However, to promote longevity of these two trees, careful thinning of trees adjacent is anticipated.

35. The root protection areas (RPA's) of many trees in the tree belt are expected to be restricted by Kingsmark Way with potential compensatory root growth westwards in the Site (see Tree Constraints Plan).

36. Potential development should avoid disturbance to the below ground root protection area (RPA) of a tree as well as the above ground stem and canopy. The effects of shading by new buildings can have a detrimental effect on tree health. Drainage, sewerage, attenuation tanks and utility trenches should also avoid RPA's.

37. Higher quality trees (retention categories A and B), particularly, should be retained within a development, though retaining as many trees as possible has many benefits including wellbeing, visual amenity, contributing to sustainable drainage, help in preventing soil erosion and providing wildlife habitats.

38. Many tree species are affected by pests and diseases at some point in their lifespan. Usually the tree has defence strategies to counteract or slow decay. However, certain pests and diseases, such as Dutch Elm Disease, pose a more serious threat to life and should be monitored for symptoms. Ash dieback, *Hymenoscyphus fraxineus*, is currently reducing the lifespan of many ash trees across the country and symptoms are best monitored during spring and late summer when leaf production, fall and health can be seen. See www.forestry.gov.uk for more information. Older, mature ash trees may be less susceptible to the disease. Notwithstanding ash dieback, ash trees are naturally prone to shedding the end of branches during stormy weather.

39. Those trees which overhang the public footpaths or public highways, shall require future maintenance to maintain clearance heights for vehicular or pedestrian traffic. These heights should be 5.6m above a road and 2.5m above a footpath.

40. The trees on Site are primarily of landscape value. Trees T1 to T77 plus groups G1, G2 and G3 form a visual screen to the northern end of the Site from Kingsmark Way. Tree T78 and G4, silver birches, are visible along the rear of Beever Street residences while T79 hawthorn and G5 goat willows are less noticeable, tucked behind a warehouse building at the edge of the Site. Large tree group G6 provides an attractive edge from within the Site.

Figure 1

Looking east across the Site towards the tree belt along Kingsmark Way (trees T1 to T77, G1, G2 and G3).

Figure 2

Looking south from the southern edge of the Site to tree/bush group G6 on the cutting of the disused former railway.

Figure 3

Looking south towards silver birches T78 (twin stemmed) and G4 to the rear of Beever Street, in the north-west corner of the Site.

Appendix 1: DR-4145-01 Tree Constraints Plan

Appendix 2: DR-4145-02-B Tree Protection Plan

KEY
This plan is for guidance only and should not be scaled from.
The original of this drawing was produced in colour - a mono-chrome copy should not be relied upon.

KEY
BS5837:2012 Retention categories:

Retention category A	
Retention category B	
Retention category C	
Category U	
Root Protection Area (RPA)	

Former Goldthorpe Colliery, Barnsley

Tree Constraints Plan

Dwg. No. DR-4145-01

Scale: 1:500 @ A1 Date: June 2019

Brooks Ecological Ltd 01943 884451
Unit A, 1 Station Road, Guiseley, Leeds, LS20 8BX

Brooks Ecological
Grounded advice

KEY
This plan is for guidance only and should not be scaled from.
The original of this drawing was produced in colour - a mono-chrome copy should not be relied upon.

KEY

BS5837:2012 Retention categories:

Retention category A

Retention category B

Retention category C

Category U

Root Protection Area (RPA)

Trees to be removed

Proposed tree

Tree protection barrier to BS 5837:2012

Former Goldthorpe Colliery, Barnsley

Tree Protection Plan

Dwg. No. DR-4145-02 - C

Scale: 1:500 @ A1 Date: Mar. 2020

Brooks Ecological Ltd 01943 884451
Unit A, 1 Station Road, Guiseley, Leeds, LS20 8BX