Notes:
Sketch schemes may be based on plan information of unknown origin and is subject to verification and survey.
Contractors must verify all dimensions on site before commencing any work or shop drawings. This drawing is not to be scaled. Use figured dimensions only.
Building areas are liable to adjustment over the course of the design process due to ongoing construction detailing developments.

Subject to statutory approvals and survey.

50 40 30 20 10mm

NOTE - Where garages are not constructed; footprint to be crushed aggregate with timber edge & 1800mm screen fence to be erected on line of rear garage wall.

Where double driveways are plotted; no demarcation required between driveways.

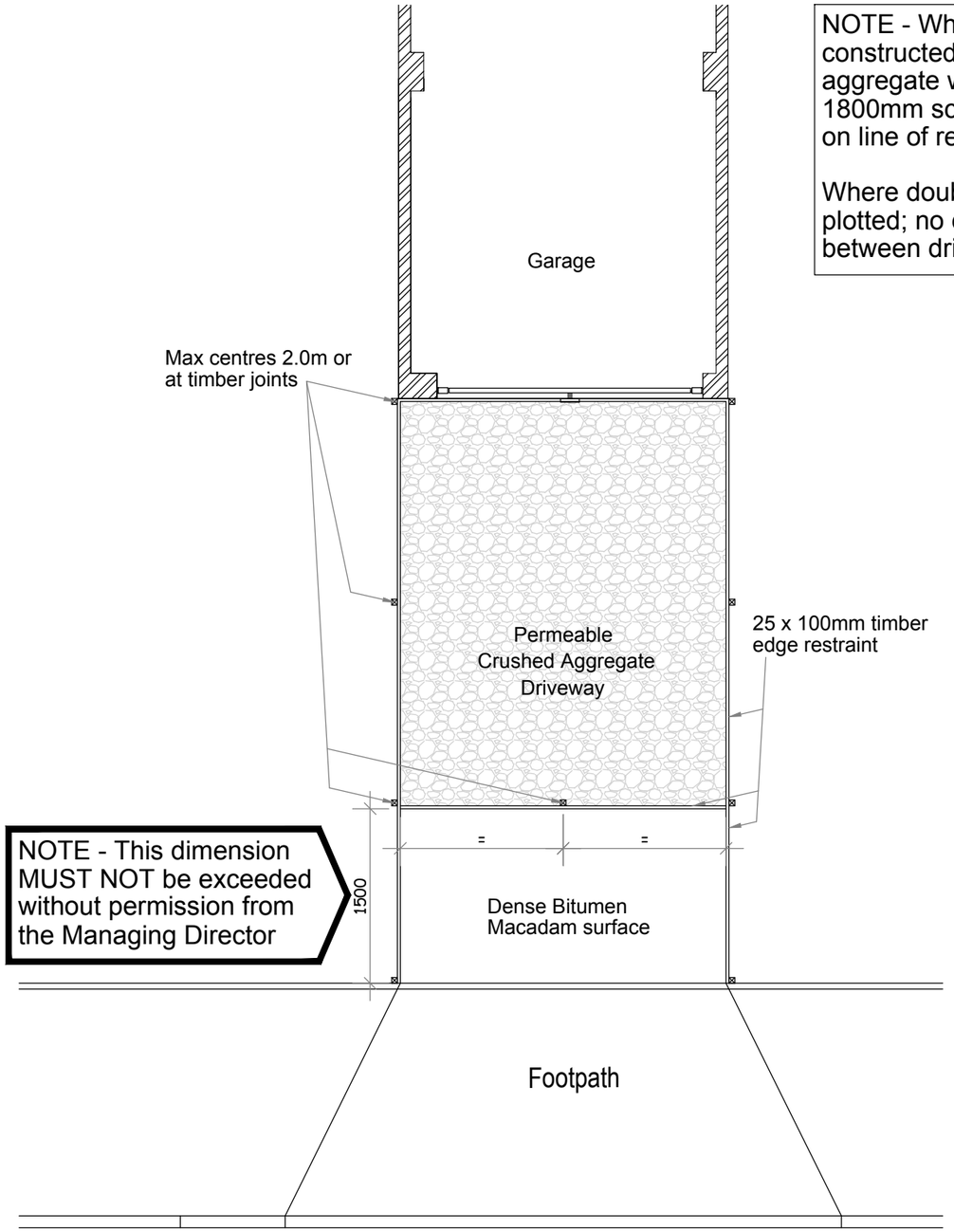

NOTE - This dimension MUST NOT be exceeded without permission from the Managing Director

NOTE - Prior to Surface Course being laid all edge restraints are to be fully backed with topsoil to prevent over-turning / bowing

Plan (1:50)

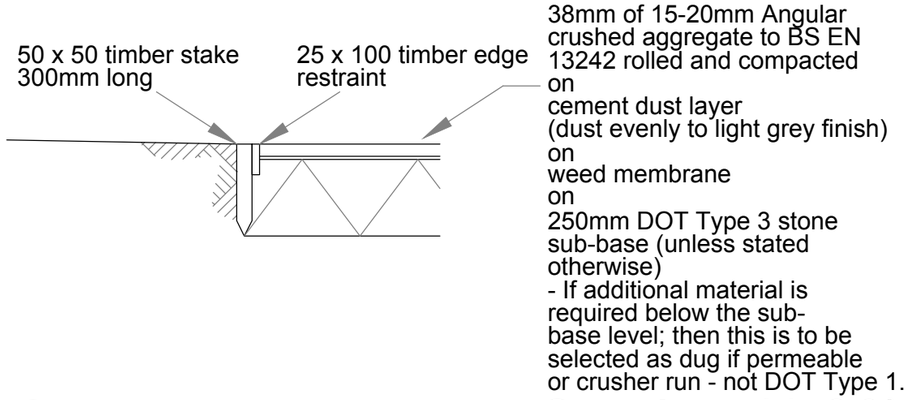

Crushed Aggregate Section (1:20)

NOTE - The Bit-Mac Layers for the aprons should be called off to correspond with adjacent footpath construction.

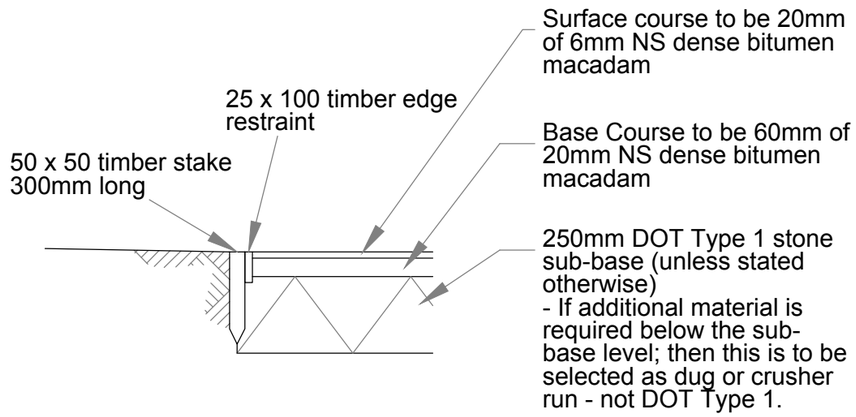

Tarmac Section (1:20)

J	Weed membrane included.	16.12.19	DJR
H	Drawing Re-Titled.	14.05.19	DJR
G	Type 1 change to Type 3 subbase.	08.1.18	AL
F	Material reference updated.	03.11.17	djr
E	Tarmac apron notation amended.	15.09.16	djb
D	Twin coat tarmac notation added.	07.06.16	djb
C	Additional Notes added re: sub-base.	06.05.16	djb
B	Additional Notes added.	15.01.16	djb
A	Drawing amended following client comments	04.07.13	wc

revisions
status -

project Standard Details
client Gleeson Homes & Regeneration
title Crushed Aggregate Drive Details

drawn djb checked . date 22.08.12 scale 1:20/50@A3
job no 0282 drawing no SD712 rev J