Proposed mixed use industrial development

at

Everill Gate Lane

Cortonwood

Phase 2 Pre-development Arboricultural Report

Prepared at the request of Benell Ltd

23 August 2018

By

Ian Kennedy

Wharncliffe Trees and Woodland Consultancy

All rights in this report are reserved. No part of it may be reproduced or transmitted, in any form or by any means, electronic, mechanical, recording or otherwise, or stored in any retrieval system of any nature, without written permission. Its content and format are for the exclusive use of the addressee in respect of this site. It may not be sold, lent, hired out or divulged to any third party not directly involved in this site without written consent.

Summary

I have been instructed by Mr Joshi of Benell Ltd to carry out a pre-development tree survey of the significant trees and hedges on land to the south of Everill Gate Lane, Cortonwood, Barnsley where four industrial units and associated features are proposed.

The location and spread of the trees and hedges are recorded on Plan 1 that shows the existing layout. Table 1 records information about the trees and hedges, including their species, dimensions, age, life expectancy, retention categories and root protection areas. This information was collected, interpreted and recorded in accordance with BS5837:2012 *Trees in relation to design, demolition and construction – Recommendations*.

Plan 2 shows the proposed layout and Plan 3 is the tree protection plan.

Most of the site is open with no trees or hedges. The trees and hedges are confined to the boundaries and most are growing on neighbouring land up to the site boundary. Only the trees and hedges on the northern boundary with Everill Gate Lane are inside the site.

The only significant tree on the site is a mature oak in the north eastern corner. This has been included in the second highest retention category (B) because of its good health, good future prospects and high landscape value.

A group of approximately 25 silver birch trees growing on the south eastern boundary have been included in category B because of the landscape contribution they make as a group. The remainder of the trees have been included in the lowest retention category (C). Most of these trees are young. The hedges are dominated by hawthorn and are growing to between 3 and 6m following a period without management.

Much of the hedge along the north western boundary (1 on Plan 1) would need to be removed to accommodate the new footway. There is sufficient space to plant a new hedge along this boundary following completion of the development.

The footway would encroach slightly into the northern part of the RPA of Tree 2. This would be a small incursion at the top of the slope. Only a small area would be affected and would be acceptable.

The trees and hedges along the north eastern and south eastern boundaries (3, 4, 5, 6 and 7 on Plan 1) would be unaffected by the proposals as the 10m wide landscaping strip is wider than the root protection areas and crown spreads.

The woodland area on the western boundary with Valley Way (9 on Plan 1) would need to be removed to accommodate the new road layout. Replanting could take place following the development.

I do not believe that the proposals would have a significant impact on the existing trees and hedges in the area.

Contents

1. Introduction 6
1.1 Instruction 6
1.2 Documents and Information Provided 6
1.3 Limitations 6
2. Site Visit and Observations 8
2.1 Site Visit 8
2.2 Brief Site Description 8
2.3 Development Proposals 8
2.4 Tree Observations 8
2.5 Locations of the Trees 8
3. Interpretation of Information and References 11
3.1 BS5837:2012 Tree Retention Categories 11
3.2 Below Ground Constraints; Root Protection Areas (RPA) 11
3.3 Above Ground Constraints ; Crown Spreads 12
3.4 Conception and Design 12
3.5 Japanese knotweed 13
4. Arboricultural Impact Assessment and Method Statement 14
4.1 Arboricultural Impact Assessment 14
4.2 Tree and Soil Protection 15
4.3 Relevant industry standards and codes of practice 15
4.4 General Precautions 16
5. Conclusions 17
6. Legal Considerations 18

Plan 1 Tree Constraints Plan Showing the Existing Layout 19
Plan 2 Tree Planting Plan Showing the Proposed Layout 20
Plan 3 Tree Protection Plan 21

Appendix 1. Qualifications and experience of Ian Kennedy 22
Appendix 2. Tree retention categories 24
Appendix 3. Explanatory notes for terms used in this report 25
Appendix 4. Tree protection barriers from BS5837: 2012 26

1.0 Introduction

1.1 Instruction

I have been instructed by Mr Joshi of Bennell Ltd to carry out a pre-development tree survey of the significant trees and hedges growing on land to the south of Everill Gate Lane, Cortonwood.

The tree survey is intended to provide a structured, impartial assessment of the tree population within the proposed development area.

The survey is intended to be informative to all stages of the development process and was carried out in accordance with *BS5837: 2012 Trees in relation to design, demolition and construction – Recommendations.*

1.2 Documents and Information Provided

I was provided with the following documents:

Existing site layout plan Ref 9837-103

Approved highways alterations Ref 9837-104

Proposed site layout plan Ref 9837-105A

1.3 Limitations

This report is concerned only with assessing the condition of the trees, their importance in the local landscape and any cultural and conservation values.

It takes no account of the affects the trees may have on the soil, such as heave where trees are removed or shrinkage where trees are retained.

Trees are dynamic organisms influenced by weather, pests and diseases. Therefore, this report can only remain valid for a period of 24 months.

Any works around the trees such as trenching, pruning, storage of materials and trafficking that has not first been approved by a suitably qualified arboriculturalist will invalidate this report.

No decay detection equipment was used to gather information on the condition of the trees.

All survey and inspection was completed at ground level.

2.0 Site Visit and Observations

2.1 Site Visit

The site visit took place on 20 August 2018. All dimensions were taken using recognised methodology and arboricultural measuring equipment, unless otherwise stated.

The weather at the time of inspection was overcast but bright. Winds were light and visibility was good throughout.

2.2 Brief Site Description

This is a large site with boundaries on five sides at Ordinance Survey grid reference SE 4095 0257 to the south of Everill Gate Lane and east of Valley Way.

The site is flat with soil mounds around the boundaries. There is a steep slope from Everill Gate Lane down to the site along much of the northern boundary.

The significant vegetation is confined to the boundaries and most of the vegetation is growing outside the site boundaries.

2.3 Development Proposals

The development proposes two large industrial units and two small industrial units with associated parking, service areas and a balancing pond.

2.4 Tree Observations

The trees included in this report were inspected in detail.

Information on their size, condition and retention categories is included in Table 1 below.

2.5 Locations of the Trees

The position of the trees and hedges was provided to me on the existing site layout plan Ref 9837-103.

Table 1. The Tree Survey

Tree number	Species	Height (M)	Stem diameter (DBH in MM)	Branch spread (M)	Ht first branch above GL* (M)	Ht of canopy above GL (M)	Life stage	Vitality	General observations on the tree's condition	Estimated life in years	Category
1	Native hedgerow of hawthorn, blackthorn, elder, hazel and field maple	3.0 – 5.0	<200	North – 1.5 South – 1.5 East – 1.5 West – 1.5	GL	GL	Mature	Normal	The hedge has been unmanaged for a number years and is now open grown. A number of the larger hawthorns are developing into trees.	20+	C (1)
2	Sessile oak	14.0	610	North – 8.0 South – 7.5 East – 9.5 West – 7.0	2.0 to east	0.5 over the site	Mature	Normal	The only significant tree on the site. It is in good health and has good form with no significant defects. It has good future prospects. It is growing part way up a steep banking.	20+	B (1)
3	Woodland of goat willow, ash, hawthorn, silver birch	<12.5	<250	North – 2.0 South – 2.0 East – 2.0 West – 2.0	0.5	GL	Juvenile mature	Normal	This woodland edge appears to be outside the site; it is behind the old concrete fence posts. None of the trees have any importance individually but do form a valuable landscape screen to the site.	40+	C (1)
4	Native hedge of hawthorn with occasional cherry, field maple and lime	<5.0	<200	North – 2.5 South – 2.5 East – 2.5 West – 2.5	GL	GL	Mature	Normal	A wide, unmanaged hedge of predominantly hawthorn. These are only occasional trees in the hedge but none of these are taller than the hedge itself. The hedge is in good health and provides good screening between sites helping to screen different developments and provide a wildlife corridor.	20+	C (1)

5	Hybrid poplar	10.0	500#	North – 4.0 South – 4.0 East – 4.0 West – 4.0	1.8 to the east	2.0 over the site	Young mature	Normal	The tree is growing on neighbouring land. It is a relatively large tree and does not appear to have any significant defects but inspection was limited to application site.	20+	C (1)
6	2 x Lombardy poplars	18.0	500#	North – 2.0 South – 2.0 East – 2.0 West – 2.0	1.5 to the east	2.5	Mature	Normal	The trees are growing closely together on neighbouring land. They don't appear to have any significant defects but inspection was limited to the application site.	20+	C (1)
7	Group of approximately 25 silver birch	12.0 – 16.0	<250	North – 2.0 South – 2.0 East – 2.0 West – 2.0	1.0	1.0	Young mature	Normal	A large group of trees growing on neighbouring land.	20+	B (2)
8	Area of bramble with occasional cherry and hawthorn	<2.0	<50	North –N/A South –N/A East – N/A West – N/A	N/A	N/A	Saplings	Normal	This raised banking area is outside of the site. It is of dense bramble with only occasional small cherry and hawthorn saplings.	20+	C (1)
9	Woodland area of Norway maple, sycamore, rowan and field maple	<10.0	<200	North – 3.0 South – 3.0 East – 3.0 West – 3.0	GL	GL	Juvenile mature	Normal	A young, dense area of woodland with a dense under story of blackthorn. The trees appear to be growing on neighbouring land, possibly local authority highway land. It is a young but prominent group of trees on the highway edge. None of the trees are important individually but as a group they contribute to the local landscape.	20+	C (1)

- Estimated * GL - Ground Level

3.0 Interpretation of Information and References

My interpretation and appraisal of information gathered from the survey is based on experience of tree species, visual risk hazard assessment and the guidance set out in BS5837:2012 *Trees in Relation to Design, Demolition, Construction – Recommendations*. My qualifications and experience in arboriculture are included in appendix 1.

3.1 BS5837:2012 Tree Retention Categories

All trees have been assessed and assigned a category in accordance with Table 1 of the standard. A copy of Table 1 is included as Appendix 2. This categorisation is intended to rank trees according to their importance in terms of quality, health, life expectancy, amenity and landscape value, together with wildlife and cultural importance. This ranking assists in determining the suitability and appropriateness of trees for retention in any development. Categories A to C are those considered for retention, 'A' being highest. Category 'U' trees are those not suitable for retention because of impaired condition.

Generally category A and B trees should be given more consideration in layouts than category C trees as these are considered more valuable because of their condition, landscape value, future life expectancy or, on occasions because of their more favourable habitat value.

3.2 Below Ground Constraints; Root Protection Areas (RPAs)

The root protection area is the area of land considered necessary for trees should they be retained as part of any development. This is calculated using the stem diameter measured at 1.5 metres from ground level. This protection area is shown diagrammatically as a circle centred on the base of the tree where it is expected that rooting has not been impeded in any one direction and where disturbance has not taken place. See Plan 1. Where rooting has been impeded or disturbance taken place then the shape and size of the root protection area is modified according to an assessment of where rooting is likely to take place.

Where trees are to be retained, it is optimal to locate structures and services outside the RPA. However, where incursion becomes necessary, technical solutions may be possible to limit damage, areas lost can be compensated elsewhere, or the soil environment can be improved. In these circumstances an arboricultural method statement will be necessary to ensure that works are undertaken sympathetically and do not damage the below ground parts of the trees.

3.3 Above Ground Constraints; Crown Spreads

Ideally, working areas and construction will be out with the crown spreads of trees to be retained. However where access by high sided vehicles and machinery for construction or erection of scaffolding is necessary within the crown spreads of trees to facilitate development an arboricultural method statement will be necessary to ensure pruning works are carried out sympathetically prior to construction works commencing.

Any permanent development within the canopy spread of a tree will also require a method statement. However, the effects of shade and other perceived inconveniences of trees this close to property should also be considered, together with the future growth potential of the trees and the maintenance obligation this will bring.

3.4 Conception and Design

The constraints imposed by trees should assist with site design and layout, together with the other competing needs of development. Generally the trees in the higher categories (A and B) should be given greater consideration in any layout than the lowest retention category (C).

As well as the footprint of buildings, the provisions of services, infrastructure layout and the access space required for construction itself should be considered.

3.5 Japanese knotweed

There is a very small patch of Japanese knotweed in the eastern corner of the site on the edge of hedgerow 4. The area affected appears to be very small at this stage.

The extent is shown on photo 1 below.

4.0 Arboricultural Impact Assessment and Method Statement

4.1 Arboricultural Impact Assessment

Hedgerow on north western boundary (1)

Most of this hedge would need to be removed to accommodate the new site access and new footway along the edge of the highway. There is enough space between the new footway and buildings to establish a new hedge that could be managed at 1.5m high. The existing hedge is likely to have been managed at around this height before management ended.

Mature oak tree (2)

The new footway would encroach into the northern edge of the tree's RPA by approximately 1.5m. This is a small proportion of the tree's RPA and there will be a large area to the south, east and west of the RPA that will be unaffected.

I believed that the tree will tolerate this disturbance without detriment.

Woodland area on north eastern boundary (3)

The 10m wide landscaping strip is more than adequate to protect this narrow woodland belt. These trees would be unaffected.

Hedgerow on south eastern boundary (4)

The 10m wide landscaping strip is more than adequate to protect the hedgerow. The hedge would be unaffected.

Hybrid poplar (5)

The 10m wide landscaping strip is more than adequate to protect the RPA and crown of the tree. The tree would be unaffected.

Lombardy poplars (6)

The 10m wide landscaping strip is more than adequate to protect the RPA and crown of the trees. The trees would be unaffected.

Birch woodland belt on the southern boundary (7)

The woodland belt would be unaffected because the 10m wide landscaping strip is much wider that the crown spreads and RPAs of the trees.

Bramble area (8)

There are only a few very small trees in this bramble area. These are set back from the proposed parking and would be unaffected. They are unimportant in any case.

Woodland on the western edge (9)

The disturbance associated with the highway improvements would require the removal of most of this woodland area. The trees are growing on a steep slope. Any changes in levels and grading work that might need to be done for the improvements would cause disturbance to an area wider than the footprint of the road and footway.

I would recommend removing all of the trees from this area and replanting in the highway verge that is retained between the new road and the site boundary. This tree planting could either be new woodland planting or planting of individual standard trees.

4.2 Tree and soil protection

I recommend that fencing is erected on the edge of the landscape buffer strips at the positions shown on Plan 3. This will not only protect the existing trees and hedges but will also protect the soil that any new trees and shrubs are to be planted into from compaction.

The fencing should either be the standard shown in Appendix 4 or an alternative to be agreed with the local planning authority.

4.3 Relevant Industry Standards and Codes of Practice

The main arboricultural industry standards and codes of best practice relevant to the planning and execution of this project are:

- BS 5837 (2012) – Trees in relation to construction – Recommendations;
- BS 3998 (2010) – Tree Work – Recommendations; and

- National Joint Utilities Guidelines, Volume 4 – NJUG Guidelines For The Planning, Installation And Maintenance Of Utility Apparatus In Proximity To Trees (Issue 2) (www.njug.org.uk)

4.4 General Precautions

The following general precautions should ensure the health and longevity of the retained trees and hedges. They should be enforced during the construction phase within the RPAs of the retained trees and hedges and under their canopies.

- All work will be carried out in accordance with a current risk assessment.
- All proprietary materials will be installed in accordance with their manufacturer's instructions and a current risk assessment.
- All equipment and tools will be used in accordance with their manufacturer's instructions and a current risk assessment.
- No storage of materials or fuel.
- No bonfires within 10m of the outer edge of the crown or RPA of a tree.
- No refuelling of mechanical equipment.
- No mixing of cement.
- No washing of cement mixers.
- No raising the soil level without the agreement of the Local Planning Authority (LPA).
- No excavations without the agreement of the LPA.
- Only operate or park vehicles and plant if the soil is suitably protected, as agreed by the LPA.
- The guidance contained within the National Joint Utilities Group Volume 4 (Guidelines For The Planning, Installation And Maintenance Of Utility Apparatus In Proximity To Trees (Issue 2, 2007); http://www.njug.org.uk/) will be followed when installing underground services within the rooting areas of retained trees. To minimise potential damage to tree roots excavations will be carried out by a pneumatic excavation lance.
- No materials will be dumped or stored within the RPA of a tree or under its canopy, whether in a skip or directly on the ground, unless the ground is suitably protected against contamination and compaction.

5.0 Conclusions

Many of the trees and hedges appear to be on neighbouring land but close to the site boundary.

There is a small area of Japanese knotweed at the eastern point of the site on the edge of hedgerow 4.

The only significant tree on the site is a mature oak on the north western edge with Everill Gate Lane. This is included in retention category B. A small area of the RPA would be affected by the new footway. I believe the tree will tolerate this because a large area to the east, west and south of the RPA will be unaffected.

A group of silver birch just outside the southern boundary is included in retention category B for their landscape value.

All other trees are included in the lowest retention category (C) because of their small size and young age.

The proposals would require the removal of the hedge on the north western boundary and the woodland area on the western boundary to accommodate the proposed improvements to the highway. These could be replaced by new hedge and tree planting following completion of the development.

Most of the trees and hedges would be unaffected by the development because of the wide landscape buffer area included in the design.

I do not believe that the proposals will have a significant impact on the existing trees and hedges in the area.

6.0 Legal Considerations

Protected trees

No checks have been made with the Local Planning Authority for Tree Preservation Orders, other planning conditions or inclusion of the site in a Conservation Area. However, if any of the trees subject to this report are protected it will be necessary to apply to the local planning authority (LPA) for permission before any work, other than certain exempted operations, can be carried out.

Wildlife conservation legislation

Breeding birds are protected, together with bats and their roosts, whether their roosts are in use or not.

Some of the larger trees may have some features useful to bats for roosting, particularly summer roosts such as loose bark and small cavities in structural branches.

Consideration should be given to the presence of protected species prior to any proposed tree removal or maintenance. This will include breeding birds, principally between March and August, and bats at any time of year.

Tree surgeons should also be aware of their duties under legislation to protect wildlife and carry out their site assessment and work accordingly.

OVERALL SITE AREA
3.59 hectare (8.87 acre)

EVERILL GATE LANE

DISUSED CANAL

A633 VALLEY WAY

Approx. location of existing sewer with 10.0m no-build easement

Approximate position of Japanese knowteed

Plan 1 Tree Constraints Plan showing the existing layout

Category B Crown
Category B Stem
Category B RPA

Category C Crown
Category C Stem
Category C RPA

Plan 2 Tree Constraints Plan showing the proposed layout

Category B Crown
Category B Stem
Category B RPA

Category C Crown
Category C Stem
Category C RPA

Plan 3 Tree Protection Plan showing the proposed layout

Approved Site Access Point
(Application Ref: 2006/0064)

EVERILL GATE LANE

PROPOSED INDUSTRIAL STARTER UNITS 1 -6 (Divisible)
1,583 sq.m (14,500 sq.ft) GIA
1,301 sq.m (14,000 sq.ft) Footprint at Ground Floor
232 sq.m (2,500 sq.ft) Offices at First Floor
6.5m to Underside of Haunch
FFL 30.80

PROPOSED INDUSTRIAL STARTER UNITS 7 -10 (Divisible)
836 sq.m (9,000 sq.ft) GIA
743 sq.m (8,000 sq.ft) Footprint at Ground Floor
92.9 sq.m (1,000 sq.ft) Offices at First Floor
6.5m to Underside of Haunch
FFL-31.20

PROPOSED INDUSTRIAL UNIT 1
3,066 sq.m (33,000 sqft) GIA
2,787 sq.m (30,000 sqft) Footprint at Ground Floor
279 sq.m (3,000 sqft) Offices at First Floor
10.0m to Underside of Haunch
FFL 31.05
Total Parking - 56 Spaces (inc. 2 disabled)

PROPOSED INDUSTRIAL UNIT 2
9,197 sq.m (99,000 sqft) GIA
8,361 sq.m (90,000 sqft) Footprint at Ground Floor
836 sq.m (9,000 sqft) Offices at First Floor
12.0m to Underside of Haunch
FFL-31.30
Total Parking - 155 Spaces (inc. 6 disabled)

PROPOSED ACCESS ROAD

10.0m LANDSCAPE BUFFER

OVERALL SITE AREA
3.59 hectare (8.87 acre)

Approx. location of existing sewer with 10.0m no-build easement

Approximate position of Japanese Knowteed

Category B Crown
Category B Stem
Category B RPA

Category C Crown
Category C Stem
Category C RPA

Tree Protective Fencing

Tree or hedge to remove

Appendix 1.Qualifications and Experience of Ian Kennedy

1. Qualifications

Ian graduated from the Scottish Agricultural College in August 1995 with a Higher National Diploma in Horticulture (HND) with Distinction.

In 1998 Ian graduated from the University of Aberdeen with a BSc (Hons) Upper second class in Forestry with Arboriculture and Amenity Forestry.

He passed the LANTRA Professional Tree Inspection examination in 2006.

In 2009 his application to become a professional member of the Arboricultural Association was assessed to fulfil all the necessary requirements and he became a professional member of the Association that year.

In 2011 he passed the final examination of the Institute of Chartered Foresters and become a member of that institute in January 2012.

2. Practical experience

Presently Ian is working in private practice as an independent arboricultural and woodland management consultant undertaking tree conditions surveys, pre-development tree surveys to the BS5837:2012 standard, mortgage reports and woodland management planning works. Clients range from home owners and farmers to architects, building companies, local authorities, schools and larger development companies.

Prior to private practice Ian held a number of positions in local government. Firstly he was the arboriculturalist within a planning office in Essex. Ian gained considerable experience regarding trees in relation to development, in particular BS 5837.

Development work formed the core of his duties and applications ranged from small back garden developments to major schemes such as the redevelopment of Ministry of Defence land for private residential development. Ian also undertook all functions associated with

Tree Preservation Orders (TPOs), including the making of new TPOs, assessing suitability of applications to work on protected trees and trees in conservation areas.

Ian went on to managed a 500 hectare woodland estate for a local authority in South Yorkshire that included a mix of urban and rural woodlands. This included preparation and implementation of detailed management plans for multiply use woodlands. He undertook all aspects of silvicultural management from marking to contract tendering and monitoring. He also managed the access, conservation, landscape and archaeological requirements of the estate. Ian was directly involved in the estate achieving Forest Stewardship Council certification in 2003 and personally ensured continued certification.

Ian has worked extensively with Forestry Commission to obtain the necessary licences for management works and ensured the estate benefited fully from the full range of grants available.

Latterly at the same authority Ian went on to manage the trees and woodlands unit, having overall responsibility for management of the authority's tree and woodland stock and associated staff, together with delivery of other tree related services such as those associated with the Town and Country Planning Acts.

3. Continuing professional development

Ian regularly attends meetings, seminars and training events hosted by The Arboricultural Association. Institute of Chartered Foresters, Royal Forestry Society and Forestry Commission and benefits from the respective journals, briefings and newsletters available to members of the first three of the organisations listed.

4. Relevant experience

Ian Kennedy has spent 18 years working with trees, including as the arboricultural advisor to planning officers for a Local Planning Authority and manager of a trees and woodlands unit for another local authority with overall responsibility for trees, including in relation to the Town and Country Planning Acts.

Appendix 2. Tree Retention Categories

Table 1 **Cascade chart for tree quality assessment**

Category and definition	Criteria (including subcategories where appropriate)			Identification on plan
Trees unsuitable for retention (see Note)				
Category U Those in such a condition that they cannot realistically be retained as living trees in the context of the current land use for longer than 10 years	• Trees that have a serious, irremediable, structural defect, such that their early loss is expected due to collapse, including those that will become unviable after removal of other category U trees (e.g. where, for whatever reason, the loss of companion shelter cannot be mitigated by pruning) • Trees that are dead or are showing signs of significant, immediate, and irreversible overall decline • Trees infected with pathogens of significance to the health and/or safety of other trees nearby, or very low quality trees suppressing adjacent trees of better quality *NOTE Category U trees can have existing or potential conservation value which it might be desirable to preserve; see **4.5.7**.*			See Table 2
	1 Mainly arboricultural qualities	**2 Mainly landscape qualities**	**3 Mainly cultural values, including conservation**	
Trees to be considered for retention				
Category A **Trees of high quality** with an estimated remaining life expectancy of at least 40 years	Trees that are particularly good examples of their species, especially if rare or unusual; or those that are essential components of groups or formal or semi-formal arboricultural features (e.g. the dominant and/or principal trees within an avenue)	Trees, groups or woodlands of particular visual importance as arboricultural and/or landscape features	Trees, groups or woodlands of significant conservation, historical, commemorative or other value (e.g. veteran trees or wood-pasture)	See Table 2
Category B **Trees of moderate quality** with an estimated remaining life expectancy of at least 20 years	Trees that might be included in category A, but are downgraded because of impaired condition (e.g. presence of significant though remediable defects, including unsympathetic past management and storm damage), such that they are unlikely to be suitable for retention for beyond 40 years; or trees lacking the special quality necessary to merit the category A designation	Trees present in numbers, usually growing as groups or woodlands, such that they attract a higher collective rating than they might as individuals; or trees occurring as collectives but situated so as to make little visual contribution to the wider locality	Trees with material conservation or other cultural value	See Table 2
Category C **Trees of low quality** with an estimated remaining life expectancy of at least 10 years, or young trees with a stem diameter below 150 mm	Unremarkable trees of very limited merit or such impaired condition that they do not qualify in higher categories	Trees present in groups or woodlands, but without this conferring on them significantly greater collective landscape value; and/or trees offering low or only temporary/transient landscape benefits	Trees with no material conservation or other cultural value	See Table 2

© The British Standards Institution 2012 • 9

Appendix 3. Explanatory notes for terms used in this report

- **Compass Bearing:** N = north; S = south; E = east; W = west;
- **Age Class:** Assessed as either:
    - Young = a size which could be easily transplanted;
    - Semi-mature = prior to seed bearing age and could be transplanted with care;
    - Young Mature = early maturity, not fully grown but of seed bearing age and may have achieved mature height;
    - Mature = fully grown, annual growth is much reduced;
    - Old Mature = old for the species, possibly starting to decline;
- **Trunk Diameter:** These figures relate to the diameter of the trunk at a given distance above ground level and are recorded in centimetres measured with a diameter tape.
- **Estimated size:** #
- **Health:**
    - Normal Vitality = normal growth and twig extension;
    - Moderate Vitality = reduced twig extension but other than that few signs of ill-health;
    - Early Decline = reduced twig extension and some dead twigs in the outer canopy;
    - Mid-decline = small internodes, the canopy may be thinning and contain dead twigs and/or branches in the outer canopy, older branch wounds that haven't occluded may be decaying and forming cavities;
    - Severe Decline = sparse crown, numerous dead twigs and branches in the outer canopy, older branch wounds likely to be decaying and forming cavities;
    - Dead.
- **Structural Condition**
    - Acute stem union = a weak union between two or more stems at the main forking point caused by the formation of reaction wood. Mechanical pressure at the forking point increases as secondary thickening occurs increasing the risk of failure at that point.
    - Acute branch union = the same principle as acute stem unions but between a stem and a branch or two branches rather than 2 main stems.

Appendix 4. Tree Protection Barriers from BS5837: 2012

on retained hard surfacing or it is otherwise unfeasible to use ground pins, e.g. due to the presence of underground services, the stabilizer struts should be mounted on a block tray (Figure 3b).

NOTE 1 Examples of configurations for steel mesh perimeter fencing systems are given in BS 1722-18.

NOTE 2 It might be feasible on some sites to use temporary site office buildings as components of the tree protection barriers, provided these can be installed and removed without damaging the retained trees or their rooting environment.

6.2.2.4 All-weather notices should be attached to the barrier with words such as: "CONSTRUCTION EXCLUSION ZONE – NO ACCESS".

Figure 2 **Default specification for protective barrier**

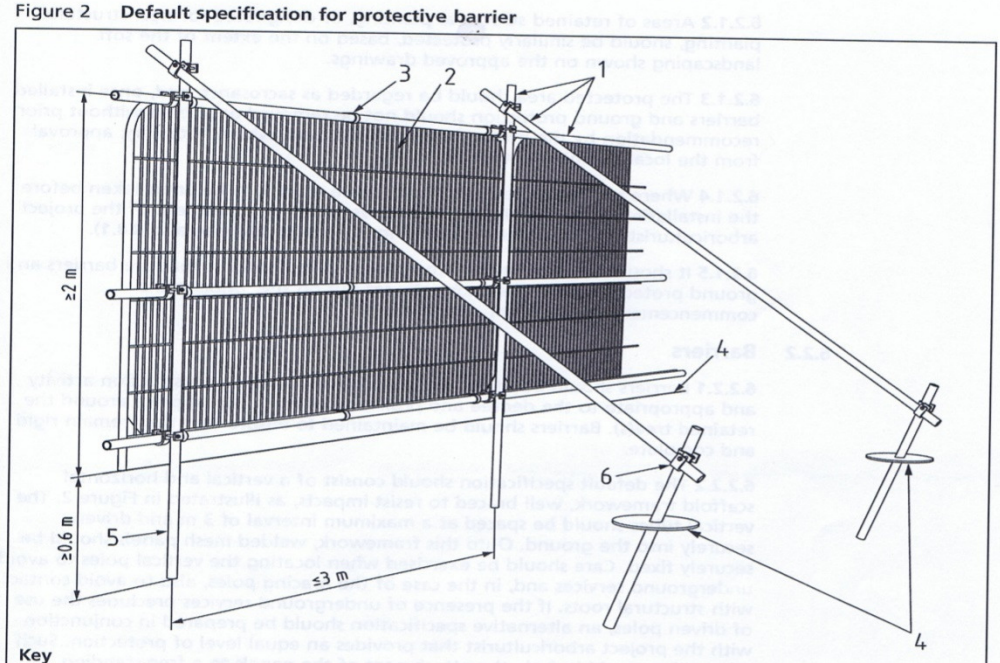

Key

1 Standard scaffold poles
2 Heavy gauge 2 m tall galvanized tube and welded mesh infill panels
3 Panels secured to uprights and cross-members with wire ties
4 Ground level
5 Uprights driven into the ground until secure (minimum depth 0.6 m)
6 Standard scaffold clamps

Figure 3 Examples of above-ground stabilizing systems

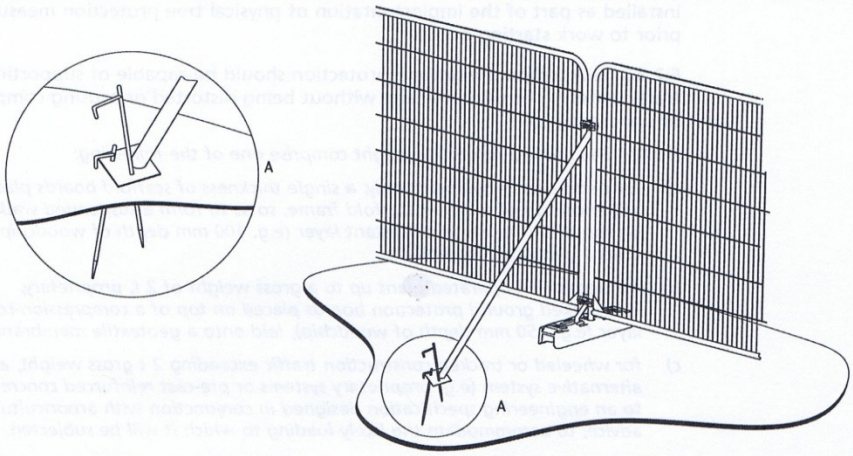

a) Stabilizer strut with base plate secured with ground pins

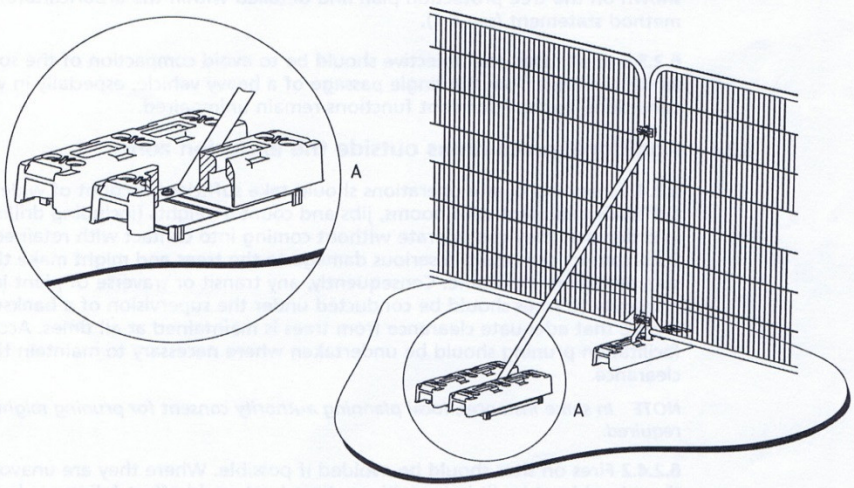

b) Stabilizer strut mounted on block tray

6.2.3 Ground protection during demolition and construction

6.2.3.1 Where construction working space or temporary construction access is justified within the RPA, this should be facilitated by a set-back in the alignment of the tree protection barrier. In such areas, suitable existing hard surfacing that is not proposed for re-use as part of the finished design should be retained to act as temporary ground protection during construction, rather than being removed during demolition. The suitability of such surfacing for this purpose should be evaluated by the project arboriculturist and an engineer as appropriate.

© The British Standards Institution 2012

Ian Kennedy
Wharncliffe Trees and Woodland Consultancy
16 Hartcliffe View
Thurgoland
Sheffield
S35 7BD

0114 288 5501
07891 488303

info@wharncliffetwc.co.uk
www.wharncliffetwc.co.uk