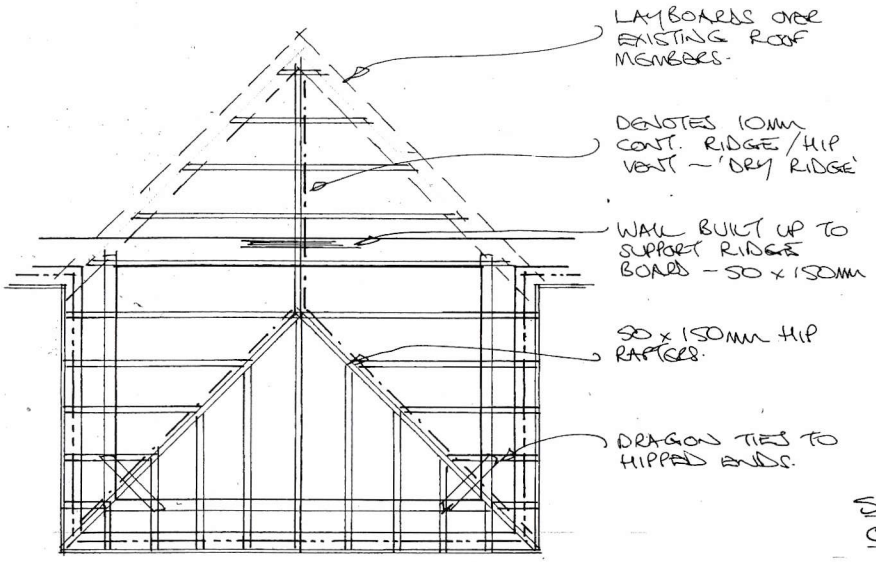

Roof

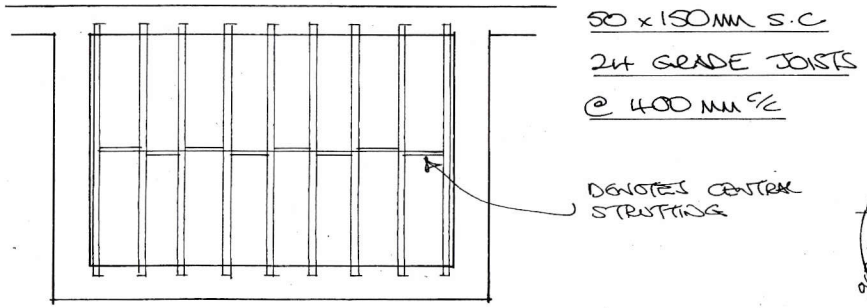

First Floor

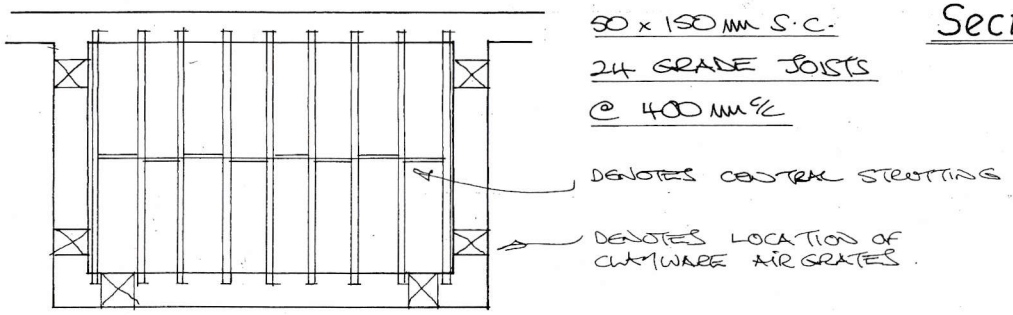

Ground Floor

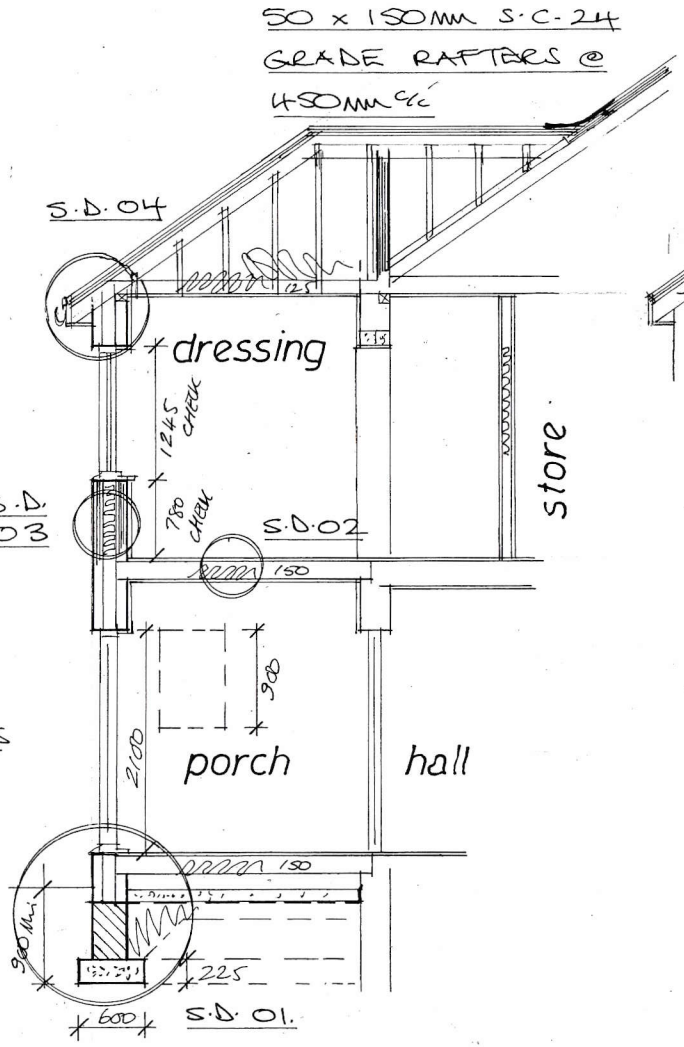

Sections

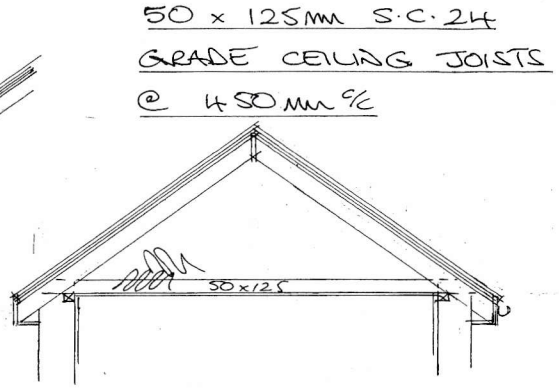

Rev	Notes	Date

Garry Greetham Associates
Residential Design Consultant
Westwood House
18 Carr Lane
Tankersley
Barnsley S75 3BE
Tel 07786062364

PROJECT	Extension & Alterations
CLIENT	Mr. Mark Crawshaw
TITLE	Section, Joist & Roof
ADDRESS	'Hillside', Wakefield Road, Barnsley. S71 1NE
DRAWN BY	ggg
SCALE	1:50 @ A3
DATE	May 25
DRAWING No	509-10
REV	

Member of the Chartered Institute of Architectural Technologists