A0

YW Ref: x-x-xxx-xxx

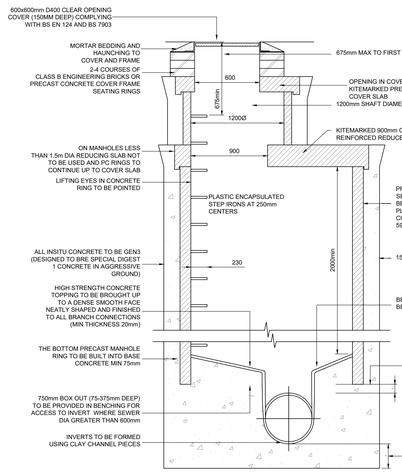


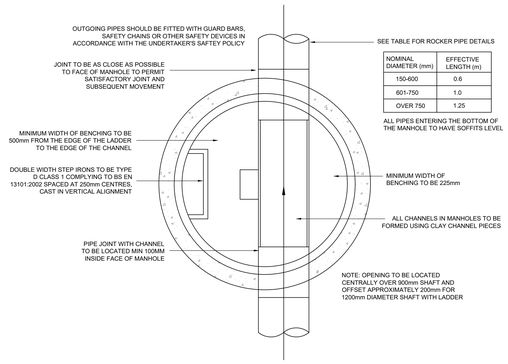


| NOMINAL DIAMETER (mm) | EFFECTIVE LENGTH (m) |
|---|---|
| 150-600 | 0.6 |
| 601-750 | 1.0 |
| OVER 750 | 1.25 |

ALL PIPES ENTERING THE BOTTOM OF THE MANHOLE TO HAVE SOFFITS LEVEL

TYPICAL MANHOLE DETAIL TYPE A
DEPTH FROM COVER LEVEL TO SOFFIT OF PIPE 3000-6000

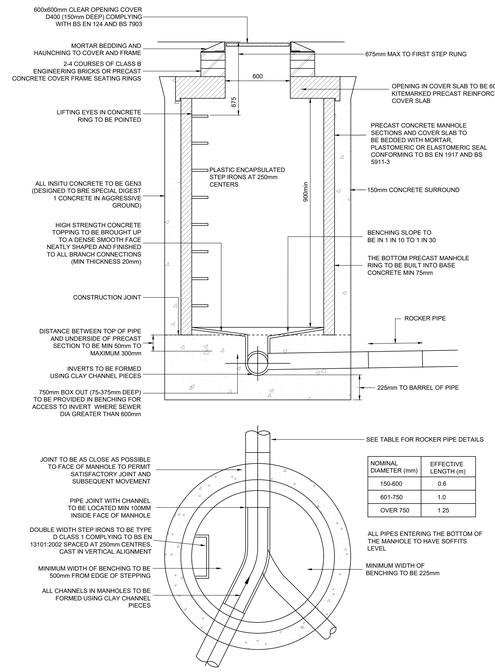





| NOMINAL DIAMETER (mm) | EFFECTIVE LENGTH (m) |
|---|---|
| 150-600 | 0.6 |
| 601-750 | 1.0 |
| OVER 750 | 1.25 |

TYPICAL MANHOLE DETAIL TYPE B
MAXIMUM DEPTH FROM COVER LEVEL TO SOFFIT OF PIPE 1500-3000

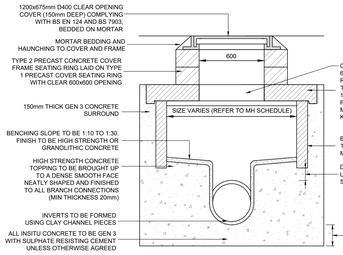


NOTE:
MANHOLES LESS THAN 1.5m TO SOFFIT WITH 1500Ø CHAMBER SIZE OR LARGER SHOULD HAVE A 1200x675mm OPENING (CENTRAL OR ECCENTRIC) SITED OVER CHANNEL WITH DOUBLE TWIN 600x600mm COVERS

TYPICAL MANHOLE DETAIL TYPE C
MAXIMUM DEPTH FROM COVER LEVEL TO SOFFIT OF PIPE 1000-1500

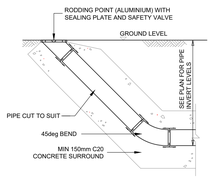


RODDING EYE DETAIL
(PRIVATE ONLY)

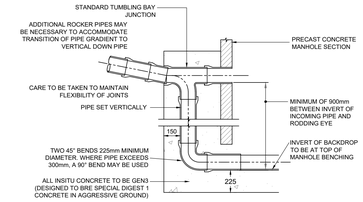


TYPICAL EXTERNAL VERTICAL
BACKDROP DETAIL

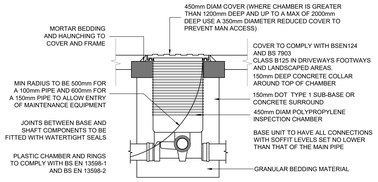


POLYPROPYLENE INSPECTION CHAMBER (PRIVATE ONLY)
(WHERE SITED IN DRIVEWAYS/PAVED AREAS) - MAX 3000 DEPTH

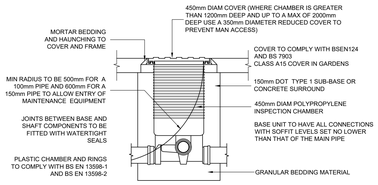


POLYPROPYLENE INSPECTION CHAMBER (PRIVATE ONLY)
(WHERE SITED IN GARDENS) - MAX 3000 DEPTH

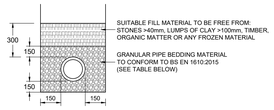


CLASS S BEDDING DETAIL

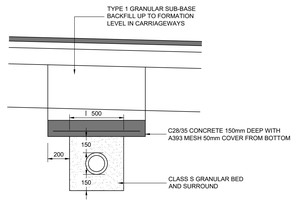


CONCRETE SLAB PROTECTION DETAIL

## YORKSHIRE WATER NOTES:

1. ALL ADOPTABLE SEWER WORKS AND MATERIAL TO BE IN ACCORDANCE WITH "DESIGN AND CONSTRUCTION GUIDANCE (DCG)/CODE FOR ADOPTION", THE RELEVANT BRITISH/EUROPEAN AND YORKSHIRE WATER'S STANDARDS/REQUIREMENTS/ADDENDUM TO THE MECHANICAL AND ELECTRICAL SPECIFICATION AND KITEMARKED.
2. MANHOLE COVERS SHALL/MUST HAVE A CLEAR OPENING OF 600mm AND SHALL BE CLASS D400 TO BE EN 124 WITH 150mm DEEP FRAMES IN HIGHWAYS.
3. FILLED GROUND MUST BE FILLED AND CONSOLIDATED UNDER THE SUPERVISION AND TO THE SATISFACTION OF YORKSHIRE WATER BEFORE ANY SEWER WORKS ARE CARRIED OUT.
4. YORKSHIRE WATER IS NOT OBLIGED TO ACCEPT FILTER DRAIN/LAND DRAINAGE RUN-OFF INTO THE PUBLIC SEWER NETWORK OR ADOPTABLE DRAINAGE (DIRECTLY OR IN-DIRECTLY). AN ALTERNATIVE METHOD OF DISPOSAL OF THE LAND DRAINAGE RUN-OFF WILL THEREFORE BE REQUIRED AND YOU WILL HAVE TO LIAISE WITH THE LOCAL AUTHORITY, LAND DRAINAGE SECTION REGARDING THE DISPOSAL OF FILTER DRAIN/LAND DRAINAGE RUN-OFF.
5. THE ADOPTABLE SEWERS SHOULD BE A MINIMUM OF 1m AND 0.5m FROM KERB FACES AND SERVICE MARGINS.
6. SEWERS MUST HAVE A 5m CLEARANCE FROM TRESS AND HEDGES OR THE WIDTH OF THE CANOPY AT MATURE HEIGHT.
7. SEWERS TO BE LAID IN CLASS "S" BEDDING (150mm GRANULAR BED AND SURROUND). WHERE DEPTH OF COVER TO TOP OF THE SEWER IS LESS THAN 1.2m IN HIGHWAYS AND VERGES (OR LESS THAN 0.9m IN NON-VEHICULAR AREAS) THEN A CONCRETE SLAB SHOULD BE PROVIDED ABOVE GRANULAR BED AND SURROUND.
8. BEDDING AND BACKFILL MATERIAL TO CONFORM TO THE REQUIREMENT OF WATER INDUSTRY SPECIFICATION 4-08-02 (TABLE A2).
9. YORKSHIRE WATER POLICY IS THAT BRICK MANHOLES AND "TYPE C" 1050mm DIA MANHOLE RINGS ARE NOT PREFERRED. INSTEAD, IT IS PREFERRED THAT A "TYPE B" MANHOLE WITH 1200mm DIA OR 1350mm DIA RINGS ARE USED. WITH THE OPENING SITED OVER THE CHANNEL WHERE DEPTH OF COVER TO PIPE SOFFIT IS 1 - 1.5m.
10. ADOPTABLE PLASTIC SEWER PIPES TO BE BSI KITEMARKED (CERTIFIED TO WIS 4-35-01) AND BSEN13476). ADOPTABLE PLASTIC PIPES SEWER PIPES TO BE LAID IN MAXIMUM 3m LENGTHS UNLESS THERE IS A SPECIFIC OPERATIONAL NEED TO LAY LONGER LENGTHS. PLASTIC CHANNEL SECTIONS IN MANHOLES ARE NOT ACCEPTABLE AND YORKSHIRE WATER WOULD PREFER CLAYWARE CHANNEL IN MANHOLES.
11. THE MINIMUM CRUSHING STRENGTH FOR CLAY PIPES SHOULD BE AS FOLLOWS: 100mm DIA. 40kN/m, 150mm DIA. 40kN/m, 225mm DIA. 45kN/m, AND 300mm DIA. 72kN/m. THE MINIMUM CRUSHING STRENGTH FOR CONCRETE PIPES SHOULD BE - (CLASS 120 TO EN 1916/BS5911-1:2002). PLASTIC PIPES SHOULD CONFIRM TO WIS 4-35-01 AND BS EN13476.
12. WHERE A B125 COVER AND FRAME HAS BEEN APPROVED, THIS MUST NOT BE COATED IN PLASTIC AND MUST HAVE LIFTING EYES SUITABLY SIZED TO ACCOMMODATE STANDARD LIFTING KEYS. SCREW DOWN COVERS ARE NOT ACCEPTABLE
13. THERE MUST BE ENOUGH CLEARANCE AT CROSSOVERS TO ACCOMMODATE BEDDING TO BOTH PIPES, APPROX 300mm. IF CROSSOVER IS NEAR THE ROCKER THEN THE CLEARANCE NEEDED MAY NEED TO BE INCREASED.

SUITABLE FILL:- THE SUITABLE FILL SHALL BE SUITABLE FOR THE LOCATION AND SHALL BE CAREFULLY COMPACTED TO PROVIDE STABILITY WITHOUT DAMAGING THE PIPE. FILL UNDER CAR PARKING AREAS AND PRIVATE ROADS TO BE WELL COMPACTED GRADED MATERIAL. FILL UNDER ADOPTED ROADS TO BE TYPE 1 GRANULAR SUB-BASE.

WHERE THE PIPES ARE TO BE ADOPTED CLASS S BEDDING TO BE USED FOR EITHER RIGID OR FLEXIBLE PIPES

SIZE OF BEDDING MATERIAL - ALL GRANULAR MATERIAL TO BE SINGLE SIZED OR GRADED

| PIPE DIAMETER | NOMINAL SINGLE SIZED | GRADED |
|---|---|---|
| UP TO 100mm | 10mm | 5mm to 10mm |
| OVER 100mm TO 150mm | 10mm or 14mm | 5mm to 14mm |
| OVER 150mm TO 300mm | 10mm,14mm or 20mm | 5mm to 14mm or 5mm to 20mm |
| OVER 300mm TO 550mm | 14mm or 20mm | 5mm to 14mm or 5mm to 20mm |
| OVER 550mm | 14mm, 20mm or 40mm | 5mm to 14mm or 5mm to 20mm or 5mm to 40mm |

| PRODUCT NAME | DIAMETER (mm) | MANUFACTURER | MATERIAL |
|---|---|---|---|
| SUPERSLEVE | 100&150 (I.D) | HEPWORTH | VITRIFIED CLAY |
| SUPERSEAL | 100&225 (I.D) | HEPWORTH | VITRIFIED CLAY |
| DENSLEEVE | 100,150&225 (I.D) | NAYLOR | VITRIFIED CLAY |
| DENSEAL | 100,150&225 (I.D) | NAYLOR | VITRIFIED CLAY |
| ULTRA-DRAIN | 110&160 (O.D) | UPONOR | uPVC |
| PLASTIDRAIN | 110&160 (O.D) | HEPWORTH | uPVC |
| OSMADRAIN | 110&160 (O.D) | WAVIN | uPVC |
| OSMA ULTRARIB | 150&225 (I.D) | WAVIN | uPVC |
| SOLID WALL | 110&160 (O.D) | MARLEY | uPVC |
| QUANTUM | 150&225 (I.D) | MARLEY | uPVC |
| UNDERGROUND DRAIN | 110&160 (O.D) | POLYPIPE | uPVC |
| RIDGISEWER | 150&225 (I.D) | POLYPIPE | uPVC |

| MANUFACTURER | PRODUCT NAME | MATERIAL | MAX DEPTH |
|---|---|---|---|
| NAYLOR | PLASTIC INSPECTION CHAMBER | POLYPROPYLENE | Up to 1200mm |
| HEPWORTH | PPIC | POLYPROPYLENE | Up to 1200mm |
| UPONOR | INSPECTION CHAMBER (450MMØ) | POLYPROPYLENE | Up to 1200mm |
| MARSHALLS | INSPECTION CHAMBER TO BS5911 PT2 | PRECAST CONCRETE | Up to 1000mm |
| WAVIN | OSMA ULTRARIB INSPECTION CHAMBER | POLYPROPYLENE | Up to 1200mm |
| WAVIN | OSMADRAIN UNIVERSAL INSPECTION CHAMBER | POLYPROPYLENE | Up to 1200mm |
| WAVIN | NON ENTRY INSPECTION CHAMBER | POLYPROPYLENE | Up to 2000mm |
| MARLEY | INSPECTION CHAMBER (450MMØ) | POLYPROPYLENE | Up to 1200mm |
| POLYPIPE | 110MM INSPECTION CHAMBER (450MMØ) | POLYPROPYLENE | Up to 1200mm |

| LIMITS OF COVER IN ANY WIDTH OF TRENCH | | | |
|---|---|---|---|
| NOMINAL SIZE | LAID IN FIELDS | LAID IN LIGHT ROADS | LAID IN MAIN ROADS |
| CLASS 120 CLAYWARE PIPES (CLASS B BEDDING) | | | |
| 100-150mm | 0.6m - 8.0m | 1.2m - 8.0m | 1.2m - 8.0m |
| 225mm | 0.6m - 5.0m | 1.2m - 5.0m | 1.2m - 4.5m |
| 400mm | 0.6m - 4.5m | 1.2m - 4.5m | 1.2m - 4.0m |
| 600mm | 0.6m - 4.5m | 1.2m - 4.5m | 1.2m - 4.0m |
| CLASS M CONCRETE PIPES (CLASS B BEDDING) | | | |
| 300mm | 0.6m - 3.0m | 1.2m - 3.0m | 1.2m - 2.5m |
| 450mm | 0.6m - 3.5m | 1.2m - 3.5m | 1.2m - 2.5m |
| 600mm | 0.6m - 3.5m | 1.2m - 3.5m | 1.2m - 3.0m |
| THERMOPLASTIC PIPES (CLASS S BEDDING) | | | |
| 100 - 300mm | 0.6m - 7.0m | 0.9m - 7.0m | 0.9m - 7.0m |

| CONCRETE PROTECTION | |
|---|---|
| CLASS 1 SULPHATE CONDITIONS | |
| ADOPTABLE STANDARDS AND AREAS SUBJECT TO HEAVY LOADING | GEN3 OR GEN 3 |
| AREAS SUBJECT TO LIGHT LOADING eg. PRIVATE DRIVES, SMALL CAR PARKS | GEN1 OR ST2 |
| FOR BURIED CONCRETE EXPOSED TO SULPHATE CONDITIONS | |
| CLASS 2 | FND 2 |
| CLASS 3 | FND 3 |
| CLASS 4A | FND 4A |
| CLASS 4B | FND 4B |

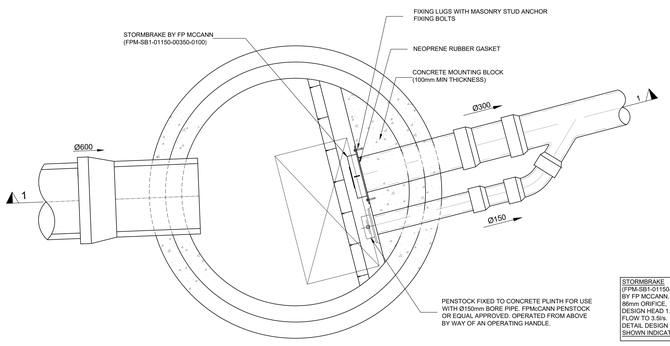


FLOW CONTROL CHAMBER
MANHOLE S19 - PLAN
SCALE 1:20

STORMBRAKE
(FPM-SB1-01150-00350-0100)
BY FP MCCANN.
86mm ORIFICE.
DESIGN HEAD 1.15m,TO RESTRICT FLOW TO 3.5l/s.
DETAIL DESIGN BY FP MCCANN.
SHOWN INDICATIVELY ONLY.

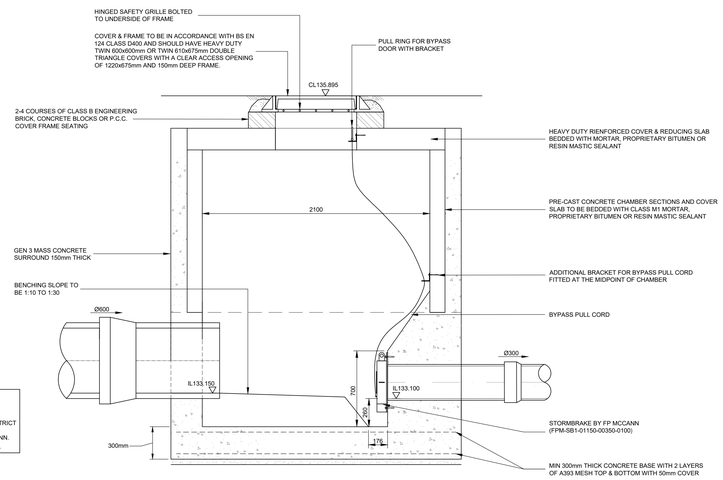


FLOW CONTROL CHAMBER
MANHOLE S19 - SECTION 1-1
SCALE 1:20

| Issue | Date | Description | By | Chk'd | Appd |
|---|---|---|---|---|---|
| P2 | 21.10.25 | Flow control chamber detail amended | GW | PB | PB |
| P1 | 30.06.25 | Preliminary Issue | GW | PB | PB |


COAST CONSULTING ENGINEERS
7 Silverton Court, Northumberland Business Park, NE23 7RY
0191 5977879


Client
BELLWAY HOMES

Job Title
HOYLAND
BARNSLEY

Drawing Title
DRAINAGE CONTRUCTION DETAILS SHEET 1

Scale at A0
N.T.S.

Drawing Status
**PRELIMINARY**

| Job No | Drawing No | Issue |
|---|---|---|
| 25035 | 91 | P2 |

© Coast Consulting Engineers Ltd.

Do not scale