YW REF: H-3-264-041

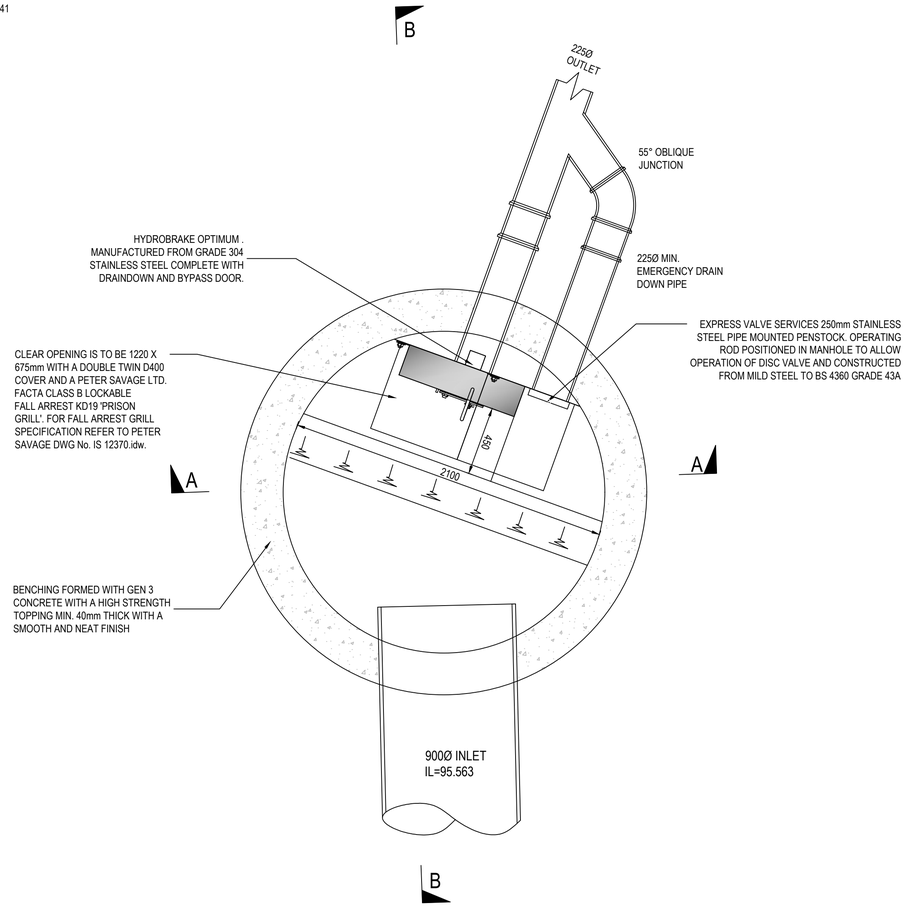

MH SW 1.17 PLAN

(1:20)

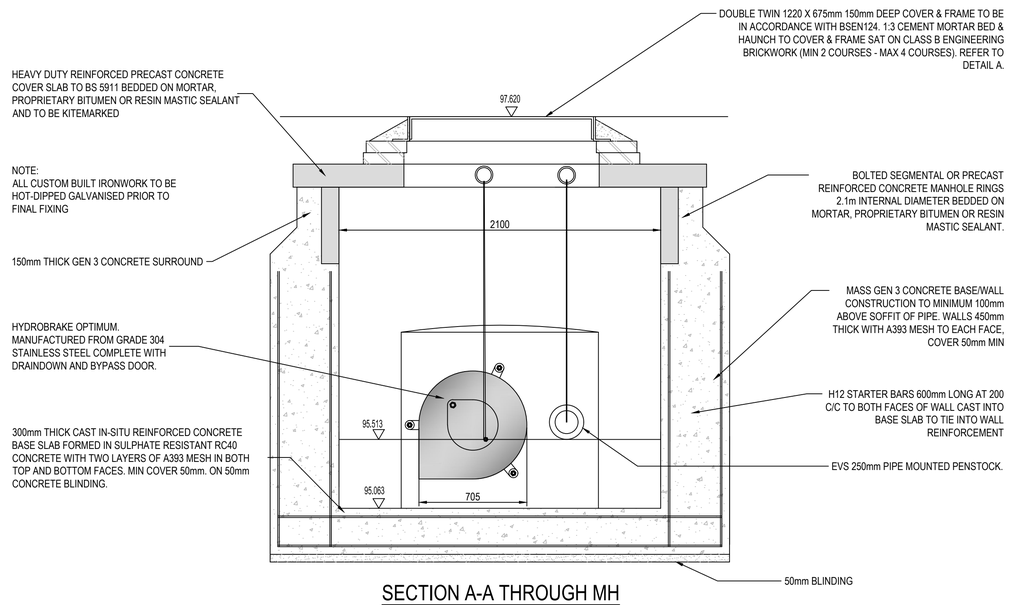

SECTION A-A THROUGH MH SW 1.17

(1:20)

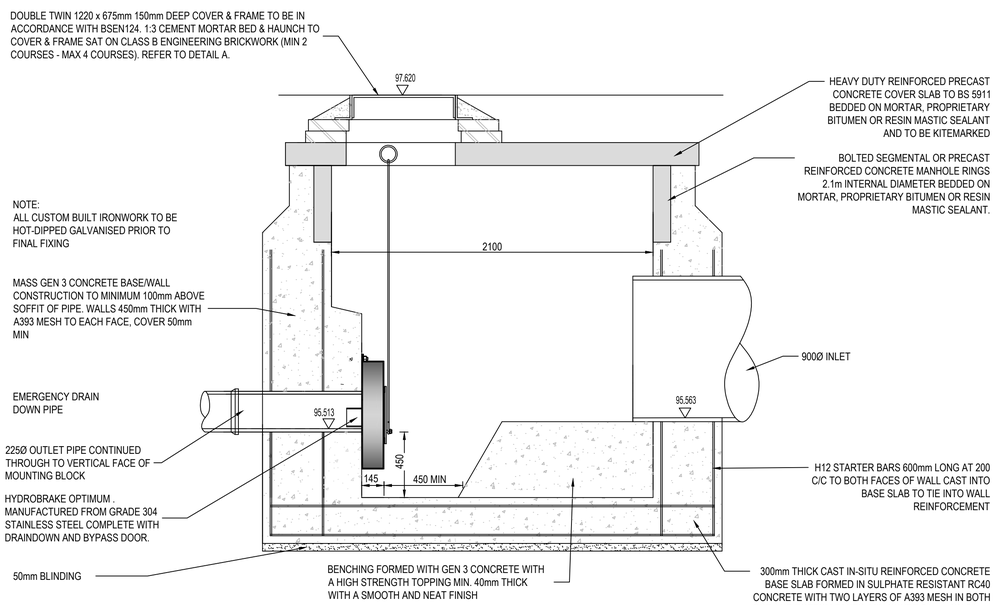

SECTION B-B THROUGH MH SW 1.17

(1:20)

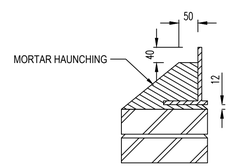

DETAIL A

(NTS)

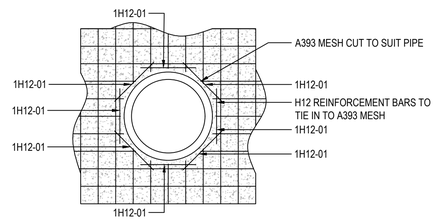

TYPICAL SECTION THROUGH REINFORCEMENT CUT OUT

1:50

FLOW CONTROL SPECIFICATION	
MANUFACTURER	HYDRO-BRAKE
REF	MD-SHE-0206-2500-1900-2500
TYPE	OPTIMUM
HEAD/FLOW	1.90m / 25.0 l/s

TO BE INSTALLED IN ACCORDANCE WITH THE MANUFACTURER'S SPECIFICATION AND RECOMMENDATIONS

PRELIMINARY

YORKSHIRE WATER NOTES:

1. ALL ADOPTABLE SEWER WORKS AND MATERIAL TO BE IN ACCORDANCE WITH "SEWERS FOR ADOPTION" 6TH EDITION, THE RELEVANT BRITISH/EUROPEAN AND YORKSHIRE WATER'S STANDARDS/REQUIREMENTS/ADDENDUM TO THE MECHANICAL AND ELECTRICAL SPECIFICATION AND KITEMARKED.
2. MANHOLE COVERS SHALL/MUST HAVE A CLEAR OPENING OF 600MM AND SHALL BE CLASS D400 TO BS EN 124 WITH 150MM DEEP FRAMES IN HIGHWAYS.
3. FILLED GROUND MUST BE FILLED AND CONSOLIDATED UNDER THE SUPERVISION AND TO THE SATISFACTION OF YORKSHIRE WATER BEFORE ANY SEWER WORKS ARE CARRIED OUT.
4. YORKSHIRE WATER IS NOT OBLIGED TO ACCEPT FILTER DRAIN/LAND DRAINAGE RUN-OFF INTO THE PUBLIC SEWER NETWORK OR ADOPTABLE DRAINAGE SYSTEM (DIRECTLY OR IN-DIRECTLY). AN ALTERNATIVE METHOD OF DISPOSAL OF THE LAND DRAINAGE RUN-OFF WILL THEREFORE BE REQUIRED AND YOU WILL HAVE TO LIAISE WITH THE LOCAL AUTHORITY, LAND DRAINAGE SECTION WITH REGARD TO THE DISPOSAL OF THE FILTER DRAIN/LAND DRAINAGE RUN-OFF.
5. COVER SLABS MUST CARRY THE BSI KITEMARK OR WILL BE REJECTED BY YORKSHIRE WATER INSPECTOR. WHERE THE CLEAR OPENING OF THE KITEMARKED PRODUCT IS DIFFERENT TO THAT OF THE COVER AND FRAME, A LOADING BEARING SLAB SHOULD BE FITTED ABOVE THE COVER SLAB TO BRING THE SIZE DOWN TO 600MM X 600MM FOR THE YORKSHIRE WATER SPECIFIED COVER SIZE. PLEASE REFER TO CONCRETE PIPE SYSTEMS ASSOCIATION (CPSA), 'TECHNICAL BULLETIN' ISSUED AUTUMN 2004 FOR KITEMARKED COVER SLAB OPENING SIZES.
6. SULPHATE RESISTANT CEMENT (C20-DC2) AND PRECAST CONCRETE PRODUCTS MUST BE USED OR A LABORATORY REPORT PROVIDED PROVING THAT SUCH PRECAUTIONS ARE NOT NECESSARY.
7. THE ADOPTABLE SEWERS SHOULD BE A MINIMUM OF 1M AND MANHOLES 0.5M FROM KERB FACES AND SERVICE MARGINS.
8. "SEWERS MUST HAVE 5 METRES CLEARANCE FROM TREES AND HEDGES (PLEASE ALSO REFER TO FIGURE 2.3 ON PAGE 33 IN "SEWERS FOR ADOPTION" 6TH EDITION FOR RESTRICTIONS ON TREE PLANTING ADJACENT TO SEWERS)".
9. SEWERS TO BE LAID IN CLASS "S" BEDDING (150MM GRANULAR BED AND SURROUND), WHERE DEPTH OF COVER TO TOP OF THE SEWER IS LESS THAN 1.2M IN HIGHWAYS AND VERGES (OR LESS THAN 900MM IN NONE VEHICULAR ACCESS THEN A CONCRETE SLAB SHOULD BE PROVIDE ABOVE GRANULAR BED AND SURROUND.
10. BEDDING AND BACKFILL MATERIAL TO CONFORM TO THE REQUIREMENT OF WATER INDUSTRY SPECIFICATION 4-08-02 (TABLE A2).
11. THE CHAMBER SIZE OF MANHOLES WITH MORE THAN ONE CONNECTION IN THEM MAY NEED TO BE INCREASED AN INCREMENT TO ACCOMMODATE THE CONNECTIONS AND BENDS.
12. YORKSHIRE WATER POLICY IS NOT TO ACCEPT TYPE "C" BRICK MANHOLES AND 1050MM DIA MANHOLE RINGS. INSTEAD IT IS PREFERRED THAT YOU USE A TYPE "B" MANHOLE WITH 1200MM DIA OR 1500MM DIA RINGS, WITH THE OPENING SITED OVER THE CHANNEL WHERE DEPTH OF COVER TO PIPE SOFFIT IS 1 - 1.5M.
13. WHERE A B125 COVER AND FRAME HAS BEEN APPROVED, THIS MUST NOT BE COATED IN PLASTIC AND MUST HAVE LIFTING EYES SUITABLY SIZED TO ACCOMMODATE STANDARD LIFTING KEYS. SCREW DOWN COVERS ARE NOT ACCEPTABLE.

No.	Revision	Drawn	Job Manager	Project Director	Date
P11	COVER SIZE UPDATED	JS	EM	VB	01.07.20
P10	MANHOLE NUMBER UPDATED	TCP	JS	VB	20.03.31
P09	UPDATED INVERT LEVELS	SA	NT	VB	09.03.20
P08	UPDATED MANHOLE NUMBER	JS	EM	VB	06.11.19
P07	ORIFICE UPDATED FOR NEW LAYOUT	JS	NT	VB	02.08.19

Drawing Revisions

Note: * indicates signatures on original issue of drawing or last revision of drawing

Gutteridge Haskins & Davey Limited

Conditions of Use. This document may only be used by GHD's client (and any other person who GHD has agreed can use this document) for the purpose for which it was prepared and must not be used by any other person or for any other purpose.

Keepmoat Homes

GHD

1st Floor, 1 Farnham Road,
Guildford, GU2 4RG, United Kingdom
T 44 (0)20 3077 7986
E UKmail@ghd.com **W** www.ghd.com

Client **KEEPMOAT HOMES**

Project **CARLTON ROAD, BARNSLEY**

Title **CONTROL MANHOLE DETAIL SW 1.17**

Scale		**DO NOT SCALE**	
Drawn	JS	Designer	NT
Drafting Check	VB	Design Check	VB
Approved (Project Director)			
Date			

This Drawing must not be used for Construction unless signed as Approved

Drawing No. **44-12501429-C057**

Original Size **A1**

Rev. **P11**