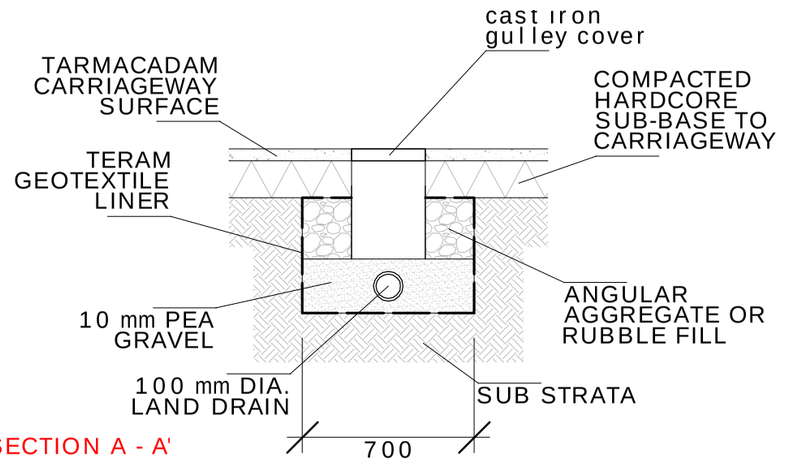

SECTION A - A'

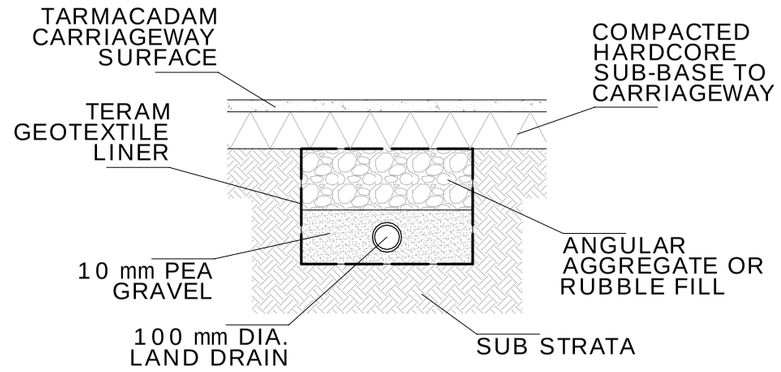

SECTION B - B'

NOTE:

drain pipe to have a
minimum cover of 50mm

ROAD GULLEY DISCHARGE SECTION 1:25

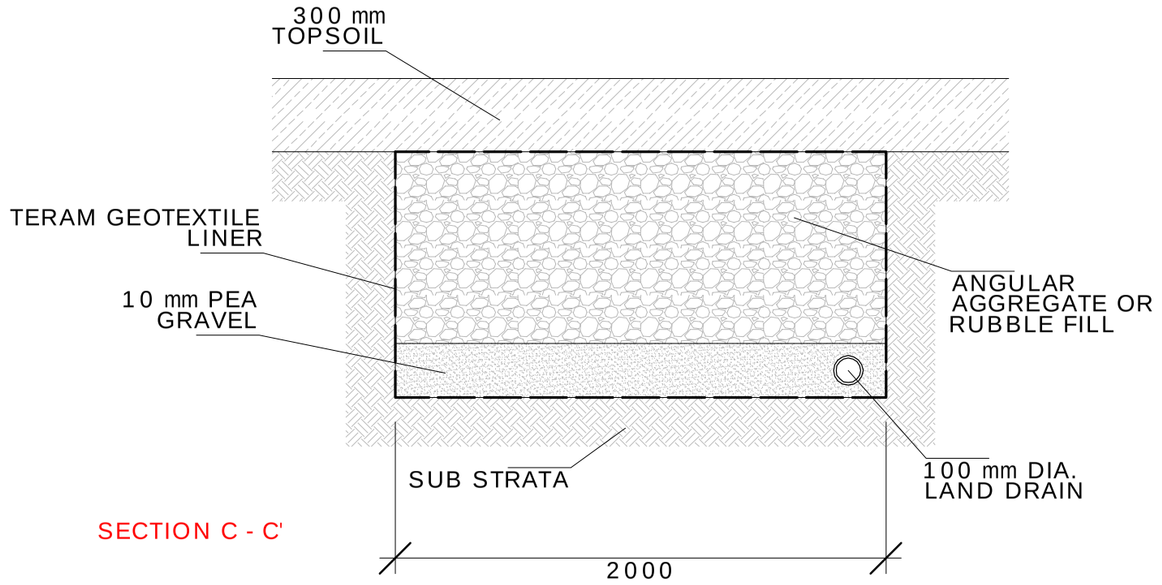

SECTION C - C'

NOTE:

drain pipe to have a
minimum cover of 50mm

depth of soakaways are to
be 1000 mm or dug down
to the top of rockhead

SOAKAWAY SECTIONS 1:25

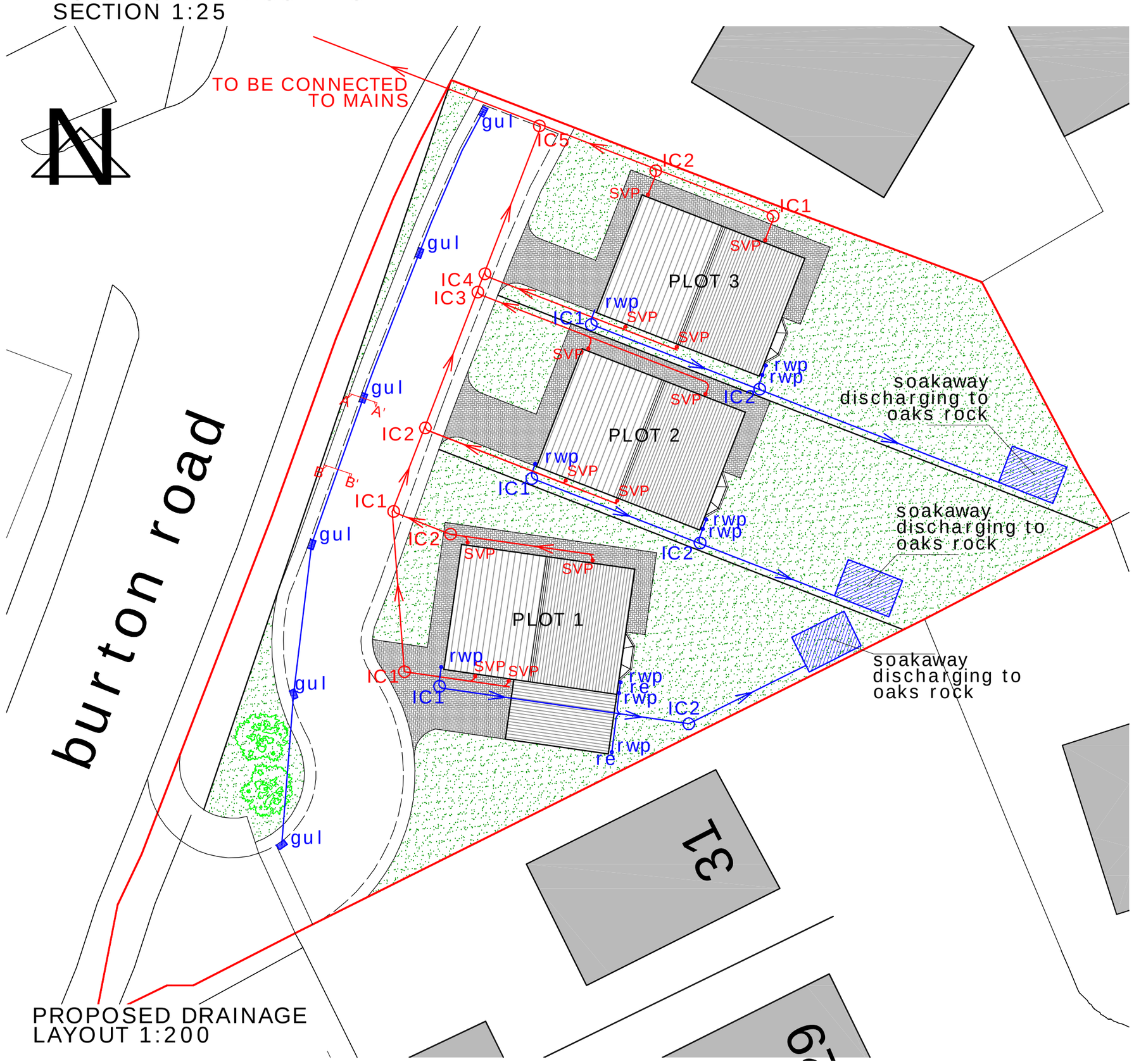

PROPOSED DRAINAGE LAYOUT 1:200

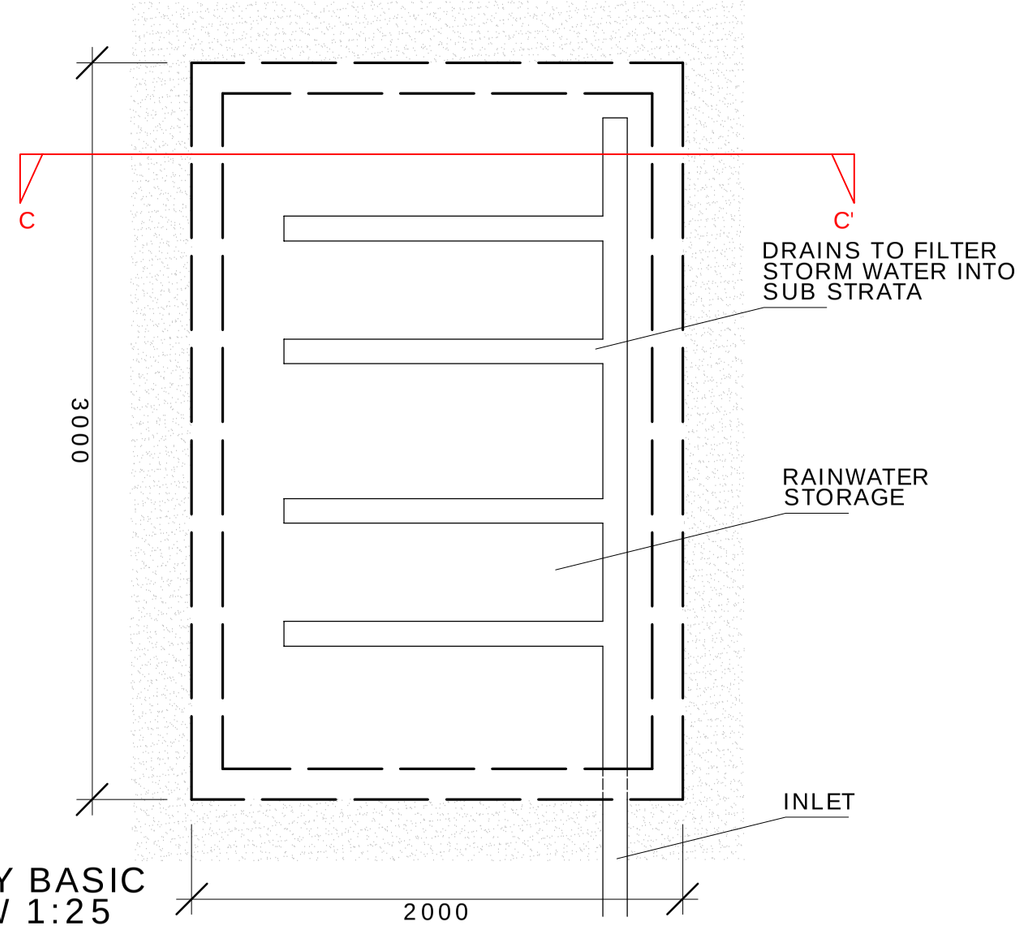

SOAKAWAY BASIC PLAN VIEW 1:25

REVISIONS

	Date	Description	By
A	01.09	Removal of house type 1 together with alteration to the road and housing layout	SS
B	02.09	Alteration to the road and housing layout	SS

DO NOT SCALE FROM DRAWING FOR CONSTRUCTION PURPOSES

ALL DIMENSIONS ARE IN MM UNLESS OTHERWISE STATED

SOAKAWAYs WILL BE 2000 mm WIDE AND 1000 mm IN DEPTH WITH JUST ONE LAND DRAIN TO THE BOTTOM OF THE SOAKAWAY STORAGE. THE LENGTH OF THE SOAKAWAYS WILL BE 3000 mm

Ground Water Drainage to Soakaways - 100 mm dia. Densleve Vitrified Clay Pipes

Foul Water Drainage 100 mm dia. Densleve Vitrified Clay Pipes

NOTE:

COVER LEVELS TO BE SET BY CONTRACTOR.

ALL INVERT LEVELS TO BE SET AT LEAST 500 mm BELOW COVER LEVEL.

RUNS TO HAVE A MINIMUM FALL OF 1 IN 80 mm.

DEPTHS INDICATIVE ONLY.
TO BE CONFIRMED ON SITE.

FGB Fennell, Green & Bates
MINING ENGINEERS, SURVEYORS & ENVIRONMENTAL CONSULTANTS
FENNELL, GREEN & BATES
25 Smyth Street
Wakefield
West Yorkshire
WF1 1ED
Tel - 01924 372197
Fax - 01924 385559
e-mail - fgb@fgb-surveyors.co.uk

Client
Mr Wilf Conway
243 Burton Road
Monk Bretton
Barnsley
S71 2QA

Site Name
243 Burton Road, Monk Bretton, Barnsley, S71 2QA

Project Title
Proposed Erection of 3No. Dwellings

Scale	Date	Drawn by	Checked
As Shown	Nov' 2008	SS	JC

Dwg. title
Proposed Drainage Layout

DWG No. BR/1193-05 Job. no. 08-10-1193B Rev. B

PLOT SIZE: A2. PLOT SCALE: 1: 1