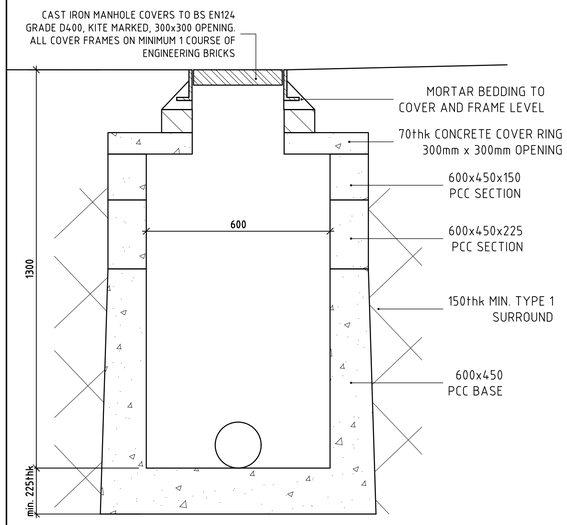

INSPECTION CHAMBER DETAILS
FOR HW IC1 AND HW IC2
SCALE 1:10

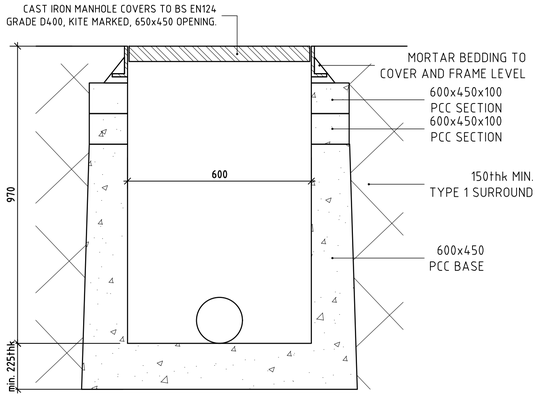

INSPECTION CHAMBER DETAILS
FOR HW IC3
SCALE 1:10

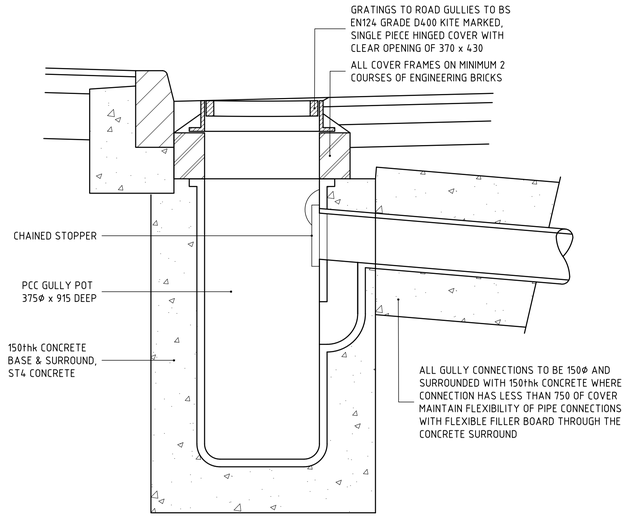

GULLY DETAILS
SCALE 1:10

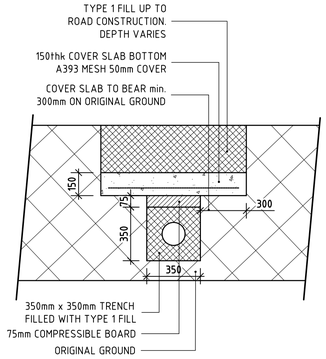

SHALLOW PIPE DETAIL- WHERE
COVER TO PIPE CROWN IS LESS
THAN 1.2m
SCALE 1:10

NOTES

1. THIS DRAWING IS NOT VALID FOR CONSTRUCTION UNLESS THE DRAWING STATUS IS INDICATED 'APPROVED FOR CONSTRUCTION' AND THE DRAWING No. IS PREFIXED WITH THE LETTER 'C'. THIS DRAWING IS TO BE READ AT FULL SIZE ON A1 SHEET.
2. THIS PROJECT IS SUBJECT TO C.D.M LEGISLATION. A PLANNING SUPERVISOR SHOULD BE APPOINTED BY THE CLIENT.
3. THIS DRAWING IS TO BE READ IN CONJUNCTION WITH THE ASSOCIATED PETER WADE CONSULTANCY DRAWINGS AS LISTED ON THE DRAWING ISSUE REGISTER. RECIPIENTS OF ALL DRAWINGS ARE TO ENSURE THAT THEY ARE WORKING TO CURRENT REVISIONS OF ALL DRAWINGS AND THAT THE REVISION HAS BEEN APPROVED FOR CONSTRUCTION BEFORE WORKS COMMENCE.
4. ALL WORKS TO COMPLY WITH PETER WADE CONSULTANCY CONDITIONS WHERE APPLICABLE.
5. PLEASE NOTE THAT ANY DEVIATION FROM THIS DRAWING MAY INVALIDATE STATUTORY APPROVALS AND WILL INVALIDATE PI INSURANCE.
6. ALL WORKS TO BE TO THE SATISFACTION OF THE BUILDING INSPECTOR. ANY CHANGES TO BE NOTIFIED TO PWC IN ADVANCE OF CARRYING OUT THE WORK.

Legend

- Existing foul drain
- Proposed foul drain
- Existing SW drain
- Proposed SW drain
- Private SW drains
- Proposed highway SW drain
- Existing combined drain
- Existing footpath
- Hard margins
- Vehicle crossing of margin
- Existing Carriageway
- Shared surface for adoption
- Highway ramp
- Development boundary
- Existing lighting column — LC
- 2m service margin

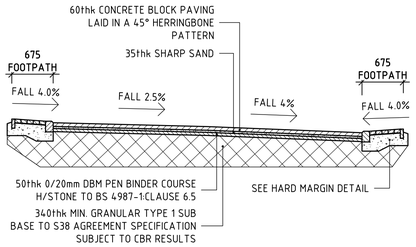

CROSS SECTION CHAINAGE 9.78m
SAME DETAILS USED THROUGHOUT DEVELOPMENT
SCALE 1:50

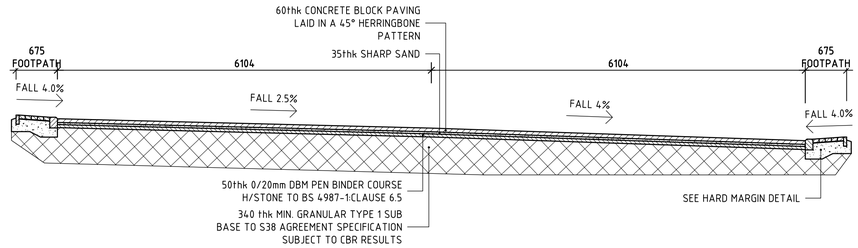

CROSS SECTION CHAINAGE 29.21m
DETAIL AT RIGHT ANGLE CORNER
SCALE 1:50

50x150 PCC FOOTWAY EDGING

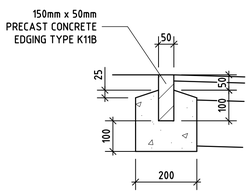

125x175 PCC 'CROSSING' KERB

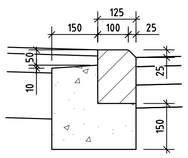

ALL CONCRETE TO BEDS AND HAUNCHES TO BE MIX ST4

HARD MARGIN

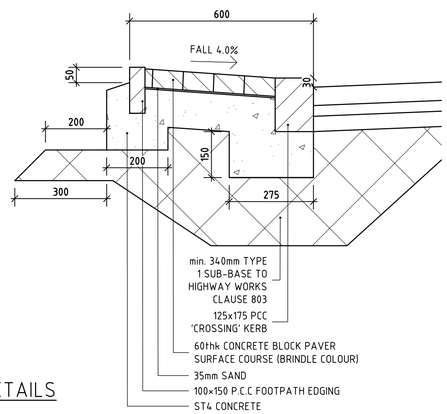

HARD MARGIN DETAILS
SCALE 1:10

MEWS COURT TRANSITION RAMP

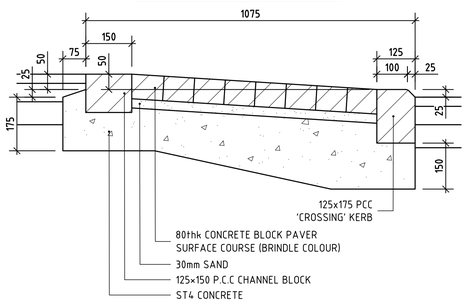

RAMP DETAILS
SCALE 1:10

CLIENT: KIRSOPP BUILDING CONTRACTORS Ltd.

PROJECT: PROPOSED DEVELOPMENT
OFF BIRK AVENUE
KENDRAY, BARNSLEY

TITLE: S38 ROAD AND DRAINAGE DETAILS

Peter Wade Consultancy
ISO9001:2015 Cert No. 14135560
Telephone: (01977) 654300
E-mail : mail@peterwadeconsultancy.co.uk

DATE: OCT 22 SCALE: AS SHOWN at A1 DRAWN: JV

DRAWING No: 3292/07 REV: -

DRAWING STATUS: PRELIMINARY ISSUE
NOT FOR CONSTRUCTION

© Peter Wade