LOCATION PLAN
SCALE 1:500

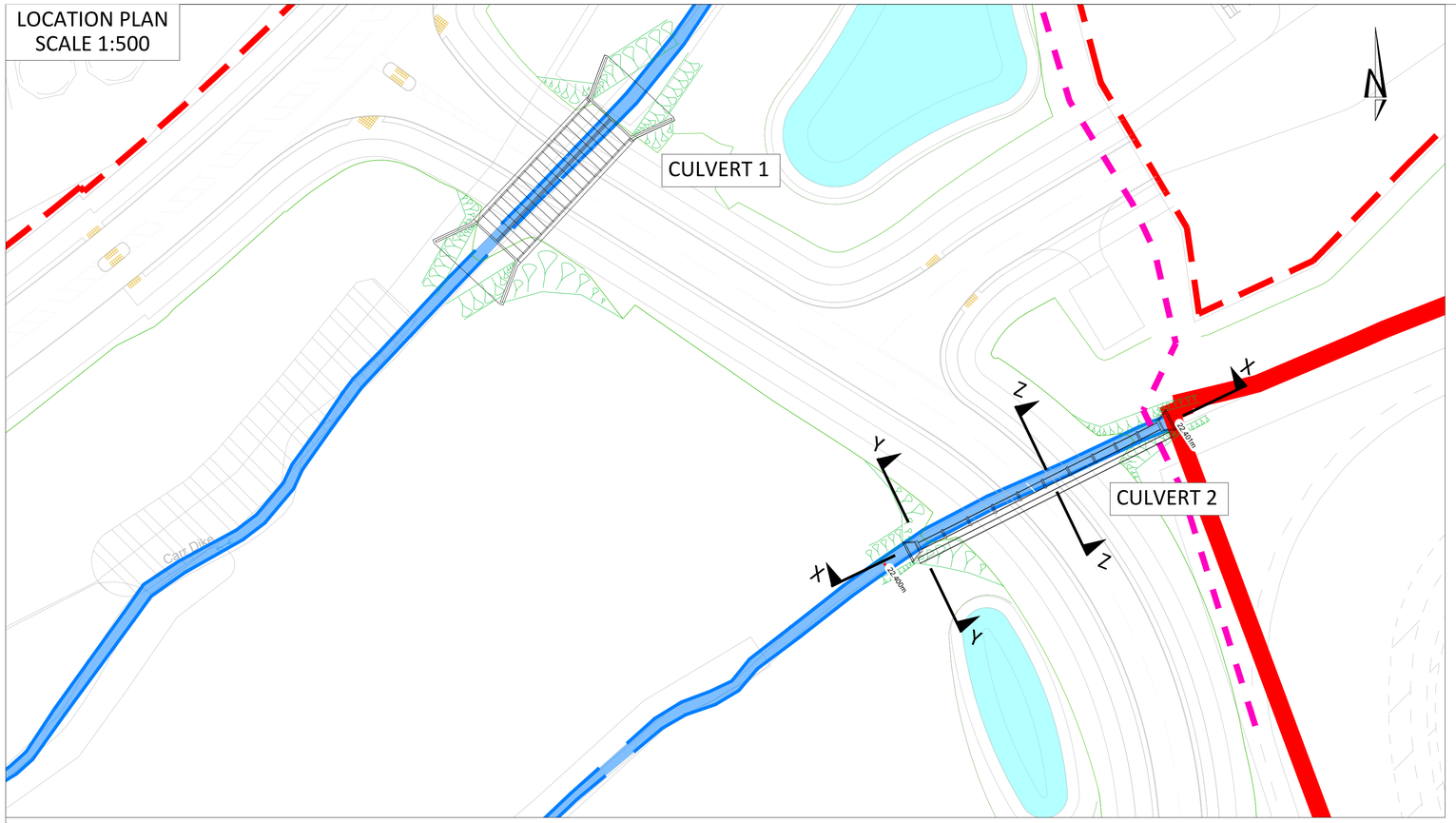

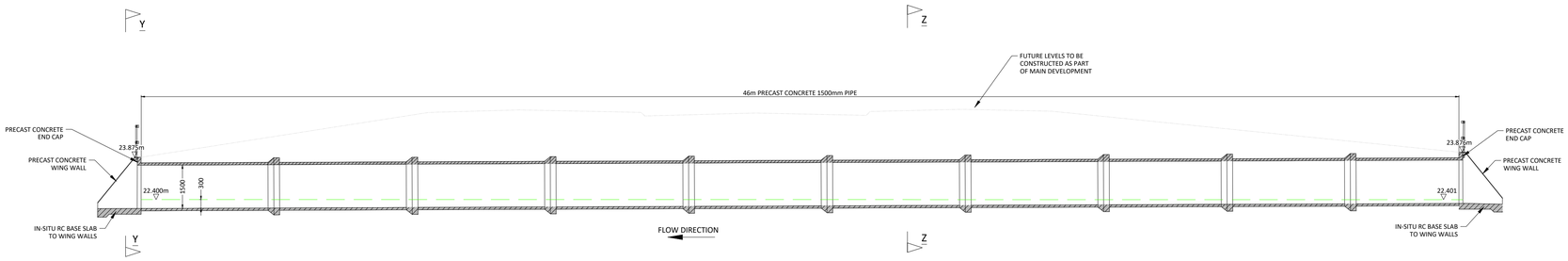

SECTION X-X
SCALE 1:100

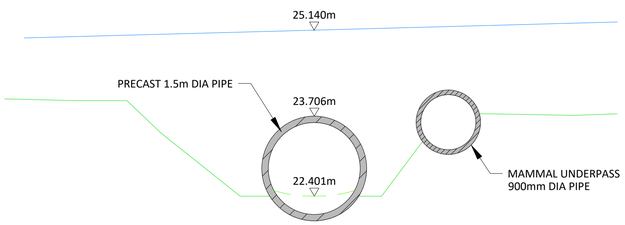

SECTION Z-Z
SCALE 1:50

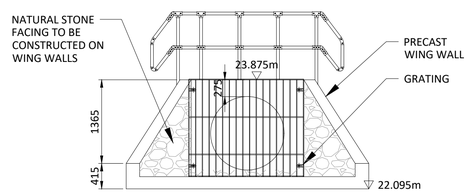

SECTION Y-Y
FRONT ELEVATION ON WING WALLS
SCALE 1:50

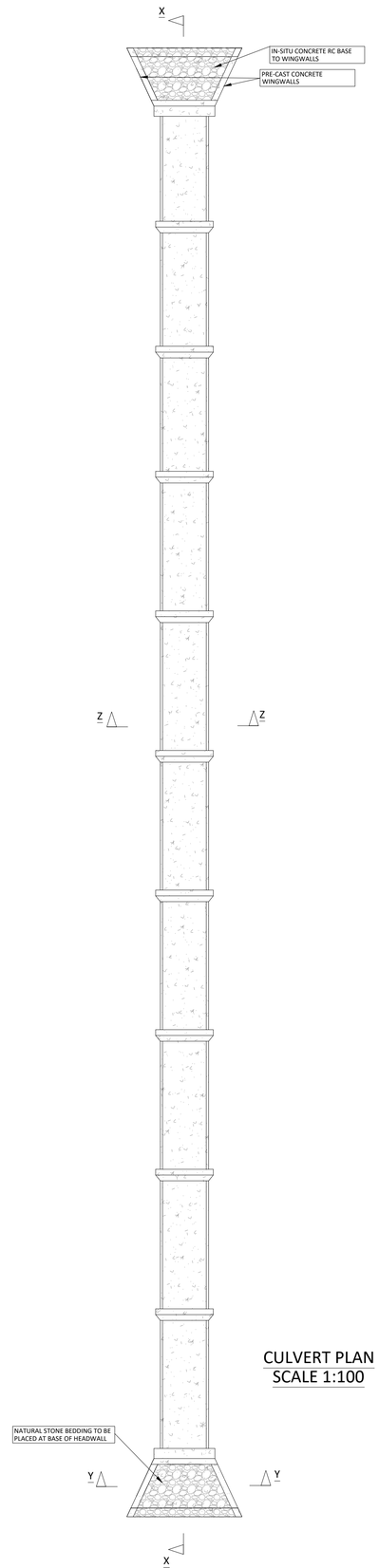

CULVERT PLAN
SCALE 1:100

Notes:

1. All dimensions are to be checked on site before the commencement of works. Any discrepancies are to be reported to the Architect & Engineer for verification. Figured dimensions only are to be taken from this drawing.
2. This drawing is to be read in conjunction with all relevant Engineers' and Service Engineers' drawings and specifications.
3. Where buildings and plot layouts are shown these are indicative only for illustrative purposes. The layouts of the development plots will be subject to future Reserved Matters applications.

SAFETY, HEALTH AND ENVIRONMENTAL INFORMATION
IN ADDITION TO THE HAZARDS/RISKS NORMALLY ASSOCIATED WITH THE TYPES OF WORK DETAILED ON THIS DRAWING, NOTE THE FOLLOWING
CONSTRUCTION
MAINTENANCE / CLEANING
DECOMMISSIONING / DEMOLITION
IT IS ASSUMED THAT ALL WORKS WILL BE CARRIED OUT BY A COMPETENT CONTRACTOR WORKING, WHERE APPROPRIATE, TO AN APPROVED METHOD STATEMENT

NOTE: DEPENDING ON MANUFACTURER - EXACT PRECAST SIZES MAY VARY BUT CAPACITY WILL NOT BE REDUCED

KEY:

- PLANNING APPLICATION BOUNDARY
- DEVELOPMENT PLOT BOUNDARY
- PROPOSED PROW ROUTE

NOTE: FOR THE AVOIDANCE OF DOUBT, THE INFORMATION SHOWN WITHIN THE DEVELOPMENT PLOTS IS INDICATIVE ONLY, AND WILL BE SUBJECT TO SUBSEQUENT RESERVED MATTERS APPLICATIONS

Rev	Date	Description	By	Ckd
P8	30.07.2024	Architect layout updated	SJ	NB
P7	13.05.2024	Mammal underpass detail updated	SJ	NB
P6	12.03.2024	Mammal underpass detail added	SJ	NB
P5	24.11.2023	Updated in line with client comments	SJ	NB
P4	08.06.2023	Note added	SJ	NB
P3	06.04.2023	Note added	SJ	NB
P2	01.03.2023	Culvert lengthened to accommodate PROW	SJ	NB
P1	21.02.2023	Planning issue	SJ	NB

Architect
umc architects

Hydrock
Hydrock Consultants Ltd
St Baldred's Hall
239 Ashley Road
Hale, Cheshire
WA15 9NE
T +44 (0)161 233 0746
manchester@hydrock.com
www.hydrock.com

Client :
newlands developments

Project Title:
BARNSLEY ROAD
GOLDTHORPE

Drawing Title:
CARR DIKE
CULVERT 2 DETAILS

Drawing Status:
PLANNING

Hydrock Job No:
C23451

Drawn	Checked	Scale @ A1	Date	Issue Date
SJ	NB	AS SHOWN	21.02.2023	21.02.2023

Drawing Number:
23451-HYD-XX-XX-DR-D-0511

Revision:
P8

This drawing is the copyright of Hydrock Consultants Ltd