All rooflights shown on drawings in relation to headroom over a staircase for a loft conversion are diagramatic only and the contractor is to note that if they are to rely on the rooflight to maintain headroom for the staircase then they should draw the staircase on the wall of the existing house and obtain approval of the staircase and headroom prior to installation of staircase from building control. Do not install the staircase/rooflight before approval from building control.

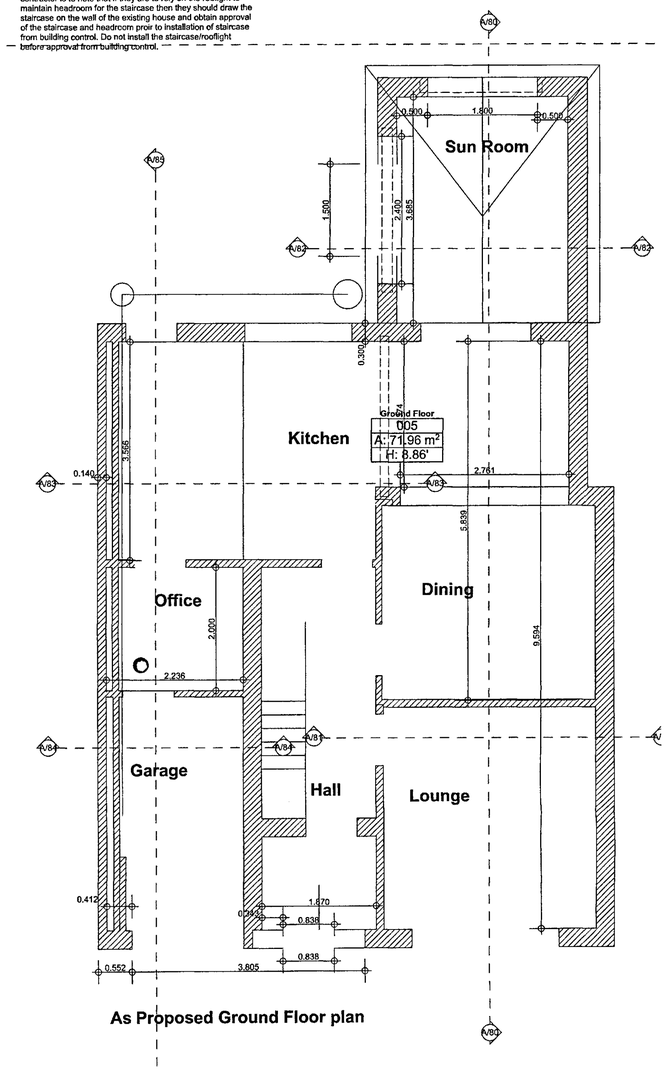

As Proposed Ground Floor plan

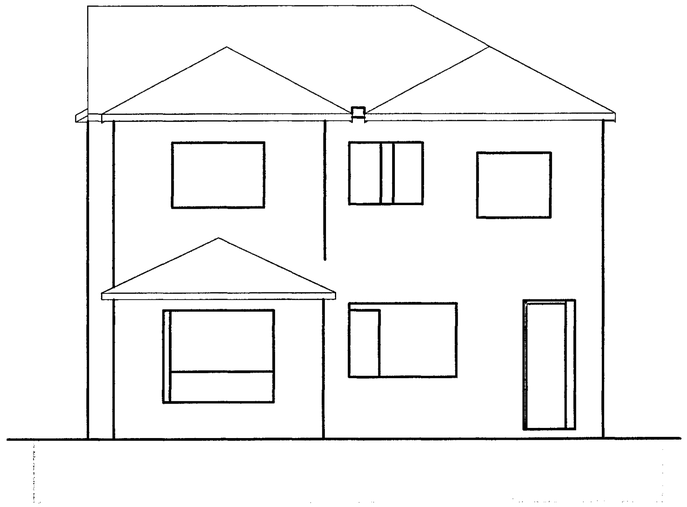

A/77 1:50

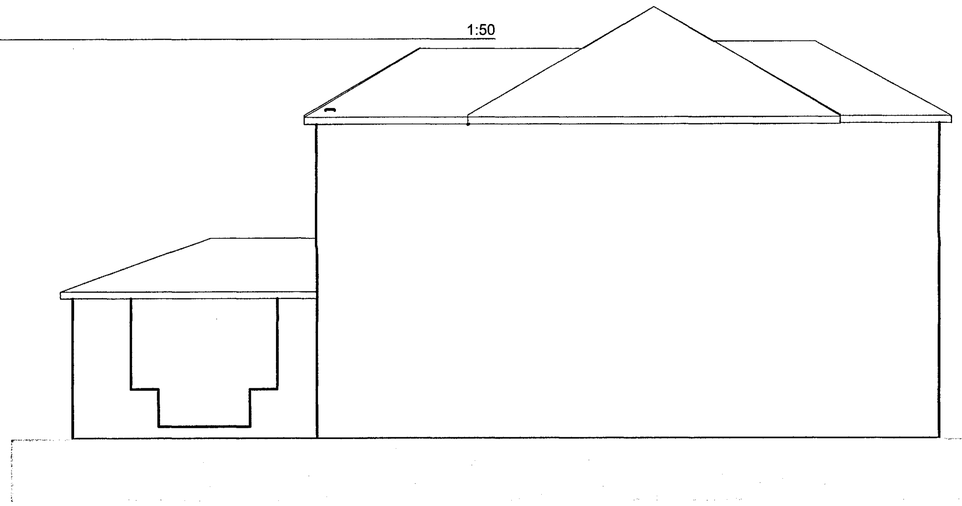

A/78 1:50

0. 18 (15) 1:50

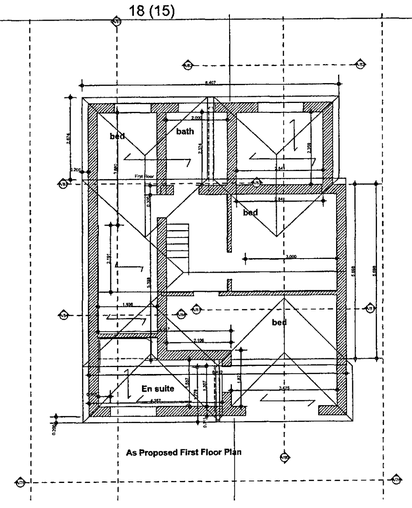

As Proposed First Floor Plan

1. Story (7) 1:100

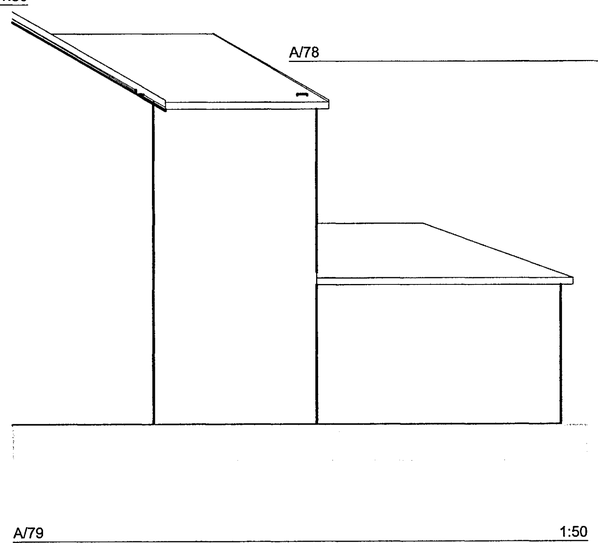

A/79 1:50

Part G water efficiency calculations are to be provided proir to completion.

Whole sale water supply to be provided by the water supply undertaker.

All baths are to be fitted witha suitable device to limit the hot water temperature to a maximum of 40 degrees C (Thermostatic mixer valves)

All hot water taps to be installed on the left hand side.

A notice confirming that the hot water system has been prperly commissioned, and issued by a person competent to do so, is to be provided on completion.

Windows to bedrooms at ground floor level to be suitable for means of escape.

Sockets and switches to be located between 450 - 1100mm from finished floor level.

Any alteration works or new works to existing heating systems to be carried out by a Gas safety registered installer.
Contractor top provide details of Gas Safety Engineer.

All electrical installation works are to be carried out under a competent persons scheme

The contractor is to check all dimensions before commencing work. He is to ensure that he has received all the necessary information and drawings before commencing work.

Any discrepancies found on site with regards to structural items are to be reported back to the architect.

All contractors must ensure that they calculate the finished floor level to finished floor level from first floor level to second floor level when carrying out works to loft conversions. Ensure that the staircase can be constructed in accordance with current building regulations, including all necessary head rooms required under the regulations.

The architect cannot be held responsible for any discrepancies if the contractor starts work on site following the deposit of the full plans drawings under the current building/planning regulations.

If the client or contractor changes the design of the building/extension following the approval of the Town Planning/Building Regulation approval drawings and further information is requested by either the Planning or building regulation department then this will result in an additional fee being charged to the client by the architect.

The architect is unaware at the time of the survey/drawing time that there were any problems with regards to ground conditions. Contractors wishing to start on site prior to full building regulations approval are advised to contact the LAB CO and confirm if there are any structural ground problems of any nature.

The drawings supplied are for building regulations and town planning approval only they are not complete working drawings.

All new doors marked thus are to be FD30 35mm th fire doors onto 13mm rebated frame

SD

Self contained smoke alarm systems should be permanently wired to a separately fused circuit at the distribution board. They may be operated at a low voltage via a mains transformer cable for the power supply to, and interconnection of, self contained smoke alarms need have no special fire survival fitted with battery back up.

Each self contained smoke alarm should be fitted to the ceiling at least 300mm from any wall or light fitting. A central position is preferable. Units designed for wall mounting should be fitted between 150 - 300mm below the ceiling. the method of fixing should comply with the manufacturers instructions. All smoke alarms are to be interconnected between the ground, first and second floor, with battery back up.

RevID	ChID	Change Name	Date

Client: Mr N Rushton

Project: Proposed single storey flat roof Extension to 9 Warner Road, Pogmoor, Barnsley

Drawing Title: As Existing Plan and elevations

Scale: 1:50, 1:100 **Date:**08/11/2019

Drawn By: AR **Rev:**

Drawing Nr: 1

Alan Robinson
Chartered Architect BA Dip Arch RIBA BSc (Hons)
2 Gawber Road, Barnsley S75 2AF
Tel/Fax 01226 286066
Mob: 07947808933

All glass to be supplied by Pilkinigtons glass unit provide by Corel windows

Address: Coral Mills, Halifax Rd, Bradford BD6 2DN
Hours:
Phone: 01274 698000

Pilkington **Optitherm**™ S1A - technical performance

Glass product/inner pane	Light (%) Transmittance	Light (%) Reflectance external	Light (%) Reflectance internal	Solar radiant heat (%) Direct transmittance	Solar radiant heat (%) Reflectance	Solar radiant heat (%) Absorptance	Solar radiant heat (%) Total transmission	Total shading coefficient	U_g-value [W/m²K] Argon (90%)
Insulating glass units: 4 mm Pilkington **Optifloat**™ Clear outer pane – 16 mm argon – 4 mm inner pane									
4 mm Pilkington **Optitherm**™ S1A	76	16	18	46	36	17	55	0.63	1.0
Triple insulating glass units: 4 mm Pilkington **Optitherm**™ S1A outer pane – 12 mm argon – 4 mm Pilkington **Optifloat**™ Clear – 12 mm argon – 4 mm inner pane									
4 mm Pilkington **Optitherm**™ S1A	64	23	23	33	42	25	40	0.46	0.7

The above performance data has been determined in accordance with EN 410 and EN 673.

Use glass spec to give 1.0w/m2K

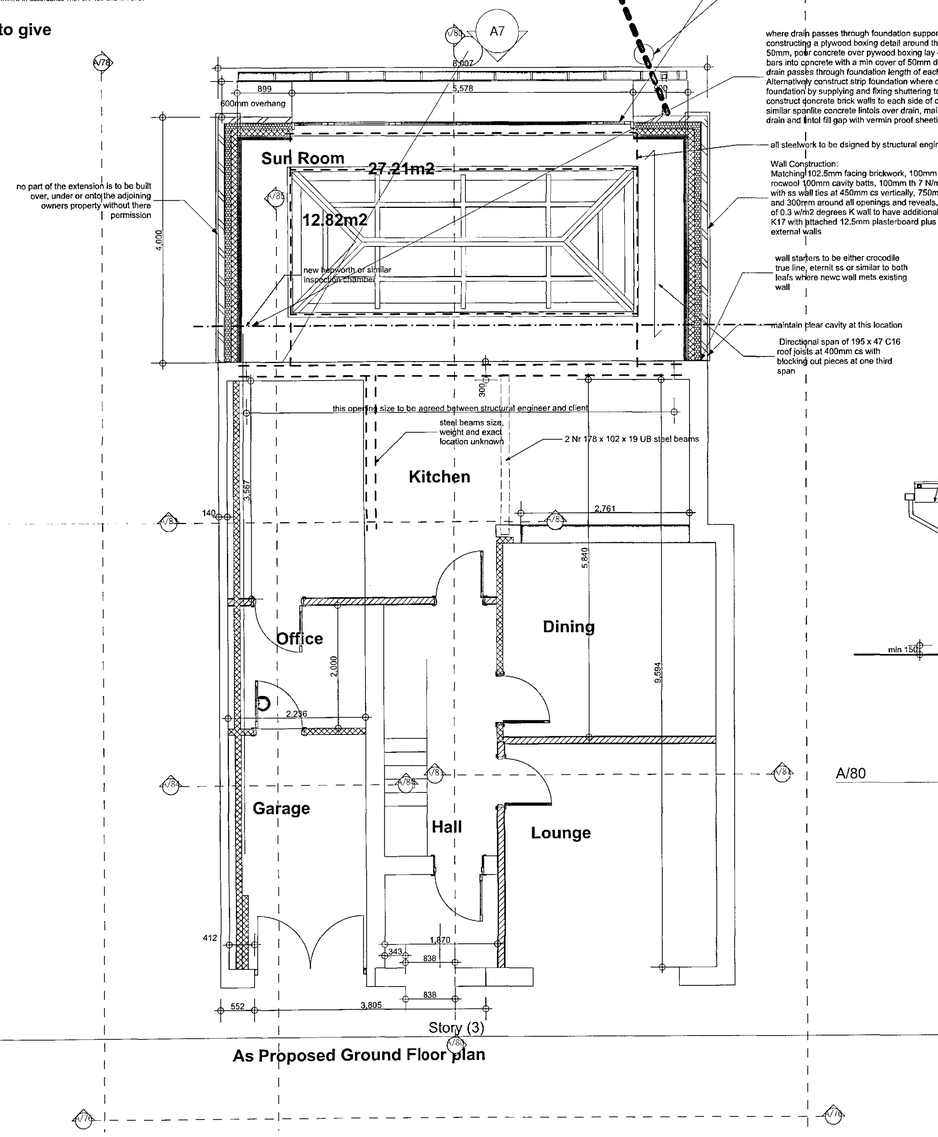

0.

As Proposed Ground Floor plan



A7 Elevation 1:50

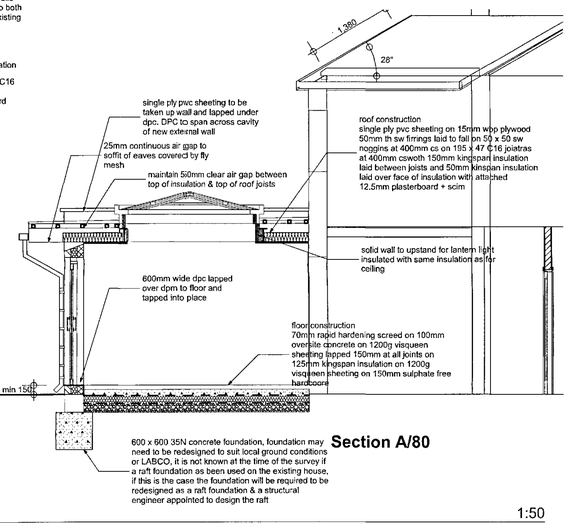

Section A/80

A/80 1:50

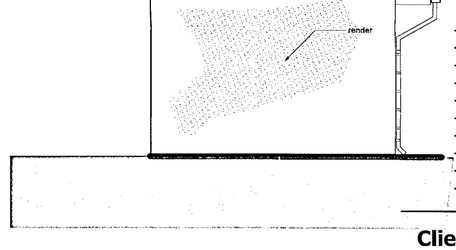

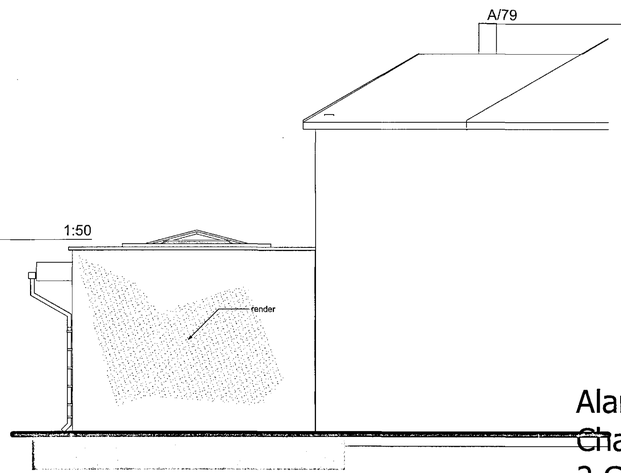

Elevation A/78

A/78 (1) 1:50

Part G water efficiency calculations are to be provided proir to completion.

Whole sale water supply to be provided by the water supply undertaker.

All baths are to be fitted witha suitable device to limit the hot water temperature to a maximum of 40 degrees C (Thermostatic mixer valves)

All hot water taps to be installed on the left hand side.

A notice confirming that the hot water system has been properly commissioned, and issued by a person competent to do so, is to be provided on completion.

Windows to bedrooms at ground floor level to be suitable for means of escape.

Sockets and switches to be located between 450 - 1100mm from finished floor level.

Any alteration works or new works to existing heating systems to be carried out by a Gas safety registered installer.
Contractor top provide details of Gas Safety Engineer.

All electrical installation works are to be carried out under a competent persons scheme

The contractor is to check all dimensions before commencing work. He is to ensure that he has received all the necessary information and drawings before commencing work.

Any discrepancies found on site with regards to structural items are to be reported back to the architect.

All contractors must ensure that they calculate the finished floor level to finished floor level from first floor level to second floor level when carrying out works to loft conversions. Ensure that the staircase can be constructed in accordance with current building regulations, including all necessary head rooms required under the regulations.

The architect cannot be held responsible for any discrepancies if the contractor starts work on site following the deposit of the full plans drawings under the current building/planning regulations.

If the client or contractor changes the design of the building/extension following the approval of the Town Planning/Building Regulation approval drawings and further information is requested by either the Planning or building regulation department then this will result in an additional fee being charged to the client by the architect.

The architect is unaware at the time of the survey/drawing time that there were any problems with regards to ground conditions. Contractors wishing to start on site prior to full building regulations approval are advised to contact the LAB CO and confirm if there are any structural ground problems of any nature.

The drawings supplied are for building regulations and town planning approval only they are not complete working drawings.

All new doors marked thus are to be FD30 35mm th fire doors onto 13mm rebated frame

SD

Self contained smoke alarm systems should be permanently wired to a separately fused circuit at the distribution board. They may be operated at a low voltage via a mains transformer cable for the power supply to, and interconnection of, self contained smoke alarms need have no special fire survival fitted with battery back up.

Each self contained smoke alarm should be fitted to the ceiling at least 300mm from any wall or light fitting. A central position is preferable. Units designed for wall mounting should be fitted between 150 - 300mm below the ceiling, the method of fixing should comply with the manufacturers instructions. All smoke alarms are to be interconnected between the ground, first and second floor, with battery back up.

Rev/D	CMD	Change Name	Date

Client: Mr N Rushton

Project: Proposed Extension to 9 Warner Road, Pogmoor, Barnsley

Drawing Title: As Proposed plan elevations and section

Scale: 1:50 **Date:**06/11/2019

Drawn By: AR **Rev:**

Drawing Nr: 2

Alan Robinson
Chartered Architect BA Dip Arch RIBA BSc (Hons)
2 Gawber Road, Barnsley S75 2AF
Tel/Fax 01226 286066
Mob: 07947808933