Evo-10K-4300-15m

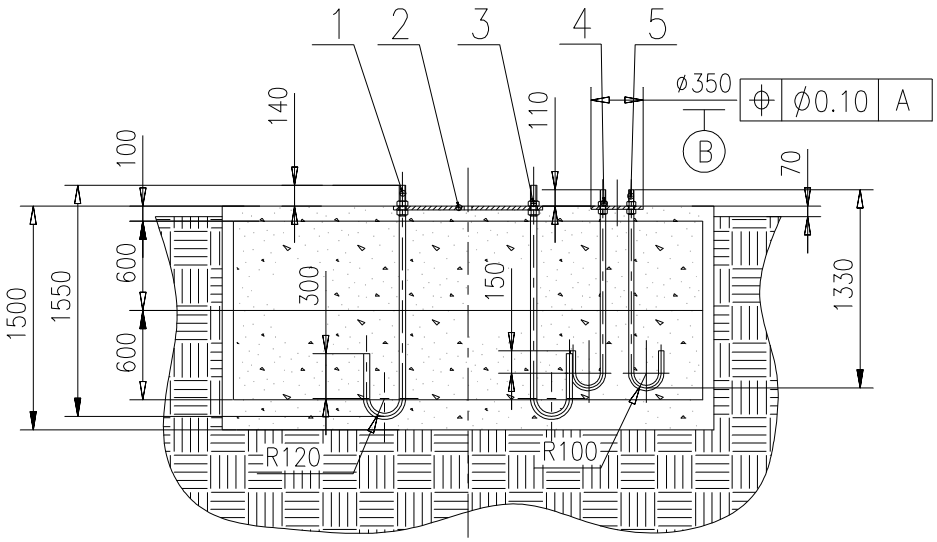

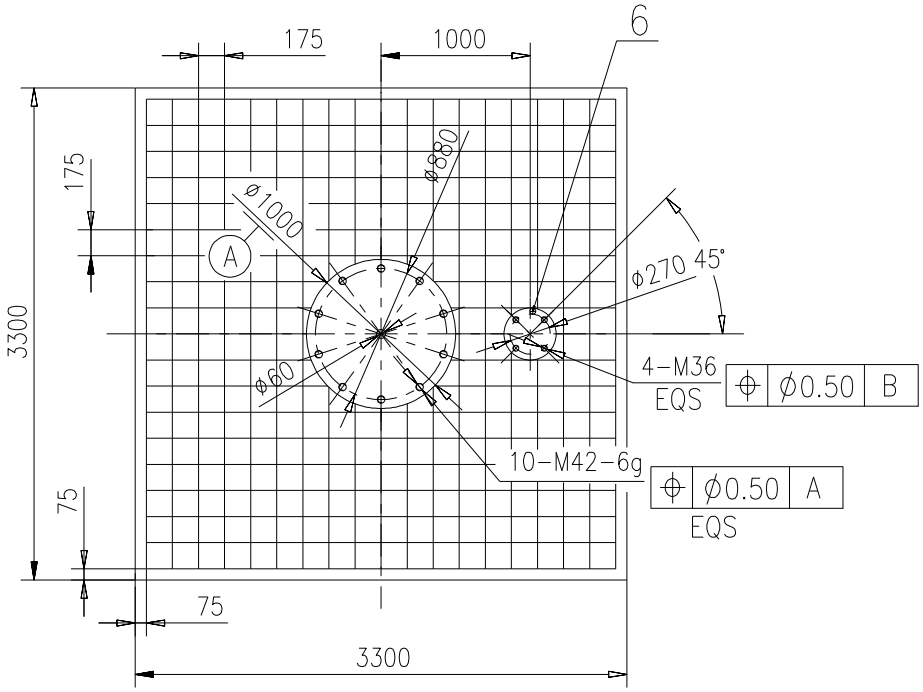

Technical requirements

1.Cast concrete directly into excavated hole. Do not shutter and backfill.
2.If the site soil conditions are chemically aggressive, very wet or the site is subject to extremes of temperature, Evoco Energy should be consulted about the choice of concrete grade. Otherwise, a 35 Newton or better concrete (C35) will be adequate for most conditions. If mixing the concrete yourself, you should use the following proportions by volume 1:2:4 cement:sand:gravel
3.Steel reinforcing mesh to be grade BS 4483, A393.
4.Anchor bolts to be grade 10.9 grade high tensile steel.
5.Exposed threads to be covered with protective caps.
6.Care should be taken whilst excavating to prevent subsidence or collapse.

No.	Drawing No.	Description	Qty.
1	Evo-10K-4310-15m	Anchor bolts M42-Tower	10
2	Evo-10K-4320-15m	No.1 foundation plate Tower	1
3	GB/T 6170-2000	Bolt M42	20
4	GB/T 6170-2000	Bolt M36	8
5	Evo-10K-4330-12m	Anchor bolts M36 Hydr Ram	4
6	Evo-10K-4330-15m	No.2 foundation plate Hydr Ram	1

DESIGNER		STANDAR	
DRAFTER			
CHECKER			
		ORDER	

Evoco Energy Ltd.
St Pegs Mill,Thornhill Beck Lane,
Brighouse.HD64AH United Kingdom.
Tel:+44(0)1484 475 800
info@evocoenergy.com

All rights reserved

scale 1:50

Tower Foundation

Evo-10K-4300-15m