Quaife Woodlands AR/3251a/jq

Arboricultural Survey and Planning Integration Report

at

Ardsley House Hotel, Doncaster Road, Barnsley, South Yorkshire, S71 5EH

27th July, 2015



C O N T E N T S

Section	Subject	Page
	Instructions	1
	Summary	1
	Documents Supplied	2
1	Scope of Survey	2
2	Survey Method	2
3	The Site	3
4	Subject Trees	3
5	The Proposal	4
6	Arboricultural Landscape Integration	5
7	Post Development Pressure	6
8	Tree Protection Measures	7
9	Conclusions	9
10	Recommendations	10

Appendix A	Schedule of Subject Trees
Appendix B	Site Plan – Existing Layout
Appendix C	Site Plan – Proposed Layout
Appendix D	TPO Plan
Appendix E	RPA Radii Table
Appendix F	BS5837 Extract – Tree Protection Fencing
Appendix G	BS5837 Extract – Tree Protection Fencing (light)
Appendix H	Building and Surface Uptake within an RPA

Arboricultural and Woodland Consultants

Quaife Woodlands

2 Squerryes Farm Cottages, Westerham, Kent. TN16 1SL
Telephone: 01959 563878 Facsimile: 01959 564854
E-mail: jq@quaife-woodlands.co.uk

ARBORICULTURAL REPORT

LOCATION	Ardsley House Hotel, Doncaster Road, Barnsley, South Yorkshire, S71 5EH	**REF:**	**AR/3251a/jq**
CLIENT	Arncliffe Homes Limited, Arncliffe House, Bramley Grange, Skeltons Lane, Thorner, Leeds, LS14 3DW	**DATE OF REPORT**	27th July, 2015
REPORT PREPARED BY	J. Quaife, AA Registered Consultant Dip.Arb.(RFS), F.Arbor.A, CEnv.	**DATE(S) OF INSPECTION**	10th October, 2014
SURVEY INSPECTOR(S)	J. Quaife, AA Registered Consultant Dip.Arb.(RFS), F.Arbor.A, CEnv.	**SHEET No.**	1 of 10

LOCAL AUTHORITY	Barnsley Metropolitan Borough Council
CONTACT	Arboricultural Officer

Please note that abbreviations introduced in [square brackets] *are used throughout the report.*

INSTRUCTIONS

Issued by – Mr T. Simpson of Kilmartin Plowman & Partners Ltd, Lodge House, 12 Town Street, Horsforth, Leeds, LS18 4RJ, on behalf of Arnscliffe Homes Limited.

TERMS OF REFERENCE – To survey the subject trees to assess their general condition and to provide a planning integration statement for the proposed development that safeguards the long term well being of the retained trees in a sustainable manner.

The content and format of this Report are for the exclusive use of the Client. It may not be sold, lent, hired out or divulged to any third party not directly involved in the subject matter without our written consent.

Summary

The site has been operated as a hotel with extensive parking provision. The proposal is to demolish the existing buildings and take up the hard surfacing and construct 27 new dwellings with associated car parking. The existing access will be used and a new internal drive arrangement constructed.
There are 73 subject trees and three groups of trees, almost all of which a peripheral to the site, with 21 trees and one group being off site.
Of this total 24 trees and one group are to be removed, which includes three which are of poor potential. All the other trees are to be retained and several are to have their crown overhang into the site pruned back. There is some scope for new planting and as a consequence the arboricultural landscape impact will be neutral.
The protection of retained trees can be effected in accordance with current standards and guidance, and there are no matters of post development pressure upon trees that could not be managed with routine maintenance. The proposal is sustainable in arboricultural terms.

Documents Supplied

- Survey Solutions Topographical Survey Plan ref: 14822cv-01 dated 18/9/14
- KPP Architects Indicative Site Plan ref: 2020 104 dated June 2015
- County Borough of Barnsley Tree Preservation Order No.23, 1973, Ardsley House

Scope of Survey

1.1 The survey is concerned with the arboricultural aspects of the site only.

1.2 The statutory protection status of the trees on site is that they are all protected by a Tree Preservation Order [TPO] within Area A1. There is a note of confirmation on the copy I have, but it is not dated. For the purposes of this Report I have assumed that the TPO has been confirmed.

1.3 No discussions took place between the surveyor and any other party.

1.4 The trees were inspected on the basis of the Visual Tree Assessment method expounded by Mattheck and Breloer (The body language of trees, DoE booklet Research for Amenity Trees No. 4, 1994).

1.5 The survey was undertaken in accordance with British Standard 5837:2012 Trees in relation to design, demolition and construction – Recommendations [BS5837].

1.6 This report sets out the Root Protection Area [RPA], described by the RPA radius [RPR] derived from Section 4.6 of BS5837.

1.7 Pruning works will be required to be in accordance with British Standard 3998:2010 Tree work - Recommendations [BS3998].

1.8 Reference is made to the National House Building Council Standards, 2008, chapter 4.2, Building near trees [NHBC].

1.9 This report does not cover the arrangements that may be required in connection with the laying or removal of underground services.

1.10 This report does not set out the working specifications of tree protection measures and engineering and design features, but provides enough detail in principle to demonstrate the feasibility of the scheme.

Survey Method

2.1 The survey was conducted from ground level with the aid of binoculars.

2.2 No tissue samples were taken nor was any internal investigation of the subject trees undertaken.

2.3 No soil samples were taken.

2.4 The height of each subject tree was estimated with a clinometer.

2.5 The stem diameters [SD] were measured in centimetres at 1.5 metres above ground level and otherwise in accordance with Annex C of BS5837.

2.6 The crown diameters were estimated by pacing or visually where access was difficult.

2.7 The positions of the subject trees are plotted at Appendix B derived from the supplied plan. Please note that the attached plan is for indicative purposes only.

The Site

3.1 The site is situated on the southern side of Doncaster Road and the entrance is off the start of Earlsmere Drive. The site is mostly level and the central part is occupied by the main building, but the land slopes down to the south beyond.

3.2 The area to the north, east and south-east of the main building is hard-surfaced for car parking. The area to the south and west is for amenity and comprises a range of mature trees on grass. There is a small enclosure for a mobile telephone relay mast in the south-eastern corner.

3.3 The site is ringed in blue on this extract reproduced from the Geological Survey Drift Map, Sheet 87, Barnsley (by permission of the British Geological Survey ©NERC. All rights reserved). The indicated soil parent material shown green is local mudstone, siltstone and sandstone, but 'sa' indicates seatearth which is a fine-grained sedimentary rock underlying coal seams. It is referred to by many different names but is essentially clay-based. ('SL' is Sharlston Low Coal).

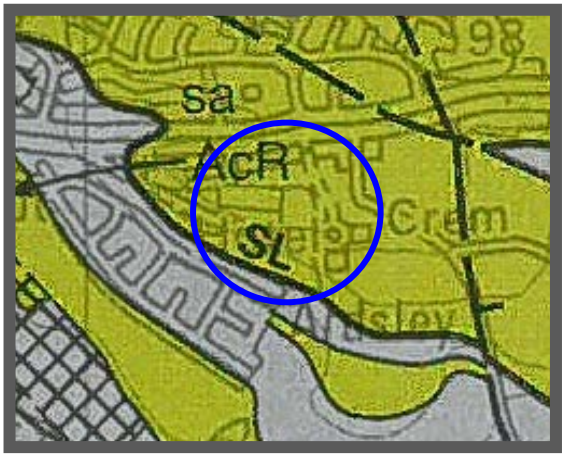

C08/105-CSL British Geological Survey.
© NERC. All rights reserved.

3.4 For the purposes of this report I have assumed the soil to be clay-based, but this will be subject to soil analysis. Generally this type of soil is a good medium for tree root growth and one would expect a normal root distribution where not impeded by the soil characteristics and subterranean obstructions.

3.5 Clay is shrinkable and susceptible to compaction which is harmful to tree roots.

Subject Trees

4.1 There are 76 subject trees (numbered to 75 because one tree is T14a) including three groups of trees as listed at Appendix A and plotted at Appendix B. Twenty-one of these trees and one group are off site. I have also plotted in black at Appendix B a few trees which are either not physically affected by the proposal or of insignificant stature or species.

4.2 Overall the trees are in reasonable condition other than the three U category trees (T44, T51 and T62) which should be removed irrespective of the proposal.

4.3 I have summarised the subject trees in Table 1 below and have graded them in accordance with BS5837[1].

Table 1. Subject Trees – species and grades

Species	A	B	C	U	Totals
Leyland Cypress	-	1G	-	-	1
Ash	-	1	1	-	2
Holly	-	-	3/1G	-	4
Sycamore	2	11	15	-	28
Beech	3	1	1	-	5
Horse Chestnut (Red)	-	-	3	-	3
Turkey Oak	-	2	-	-	2
Horse Chestnut	-	1	6	3	10
Oak	1	1	-	-	2
Ash/Cherry	-	-	1G	-	1
Lime	-	2	4	-	6
Cypress	-	1	2	-	3
Cherry	-	-	5	-	5
Corsican Pine	-	-	1	-	1
Wych Elm	-	-	1	-	1
Blue Cypress	-	-	1	-	1
London Plane	-	1	-	-	1
Totals	**6**	**22**	**45**	**3**	**76**

4.4 There is an extant TPO covering the entire original site as a single Area A1 (Appendix D). The subject site is within this area, but as it was made in September 1973, any trees of 50 years or younger are not protected. However the retention of trees has been considered on the basis of individual merit rather than any direct regard for the TPO. The development of this site will provide the Council with an opportunity to re-make the TPO to protect worthwhile trees.

4.5 None of the subject trees presents any significant risk, although some would benefit from some remedial tree surgery to remove dead wood or minor defects as a matter of routine maintenance not directly associated with the proposal.

The Proposal

5.1 The proposal is set out at Appendix C and is to demolish the existing building and construct twenty-seven dwellings in a mixture of a bungalow, terraced, detached, semi-detached houses ranging from 2 to 5 bedrooms. The existing entrance is to be used but with a new internal drive and associated car parking.

5.2 The proposed layout will include commensurate landscaping.

---

[1] BS5837 Tree Category Classes

U – Existing condition is such that any existing value would be lost within 10 years and should therefore be removed for reasons of sound arboricultural management.

A – High quality and value (40 + yrs).
1) Mainly arboricultural values 2) Mainly landscape values 3) Mainly Cultural values including conservation.

B - Of moderate quality and value (20+ years).
1) Mainly arboricultural values 2) Mainly landscape values 3) Mainly Cultural values including conservation.

C – Those of low quality and value (10+ years).
Whilst C category trees will usually not be retained where they would impose a significant constraint on development, young trees with a SD of less than 15cm could be considered for relocation.

Arboricultural Landscape Integration

6.1 Of the 73 subject trees and 3 groups, 49 and 2 groups are to be retained. The 24 trees and 1 group to be removed include the 3 of U grade. I have set out the trees to be retained and removed in Table 2 below.

Table 2. Tree Retention and Removal

Trees to be Retained +grade	Trees to be Removed +grade	U Grade Trees to be Removed
GRADE A (6) T26, T45, T46, T47, T49, T53	**GRADE A** (0)	T44, T51, T62 (3)
GRADE B (18) G1, T8, T9, T10, T12, T15, T18, T23, T24, T27, T28, T33, T34, T35, T40, T58, T63, T71	**GRADE B** (4) T21, T22, T38, T42	
GRADE C (27) T2, T6, T7, T11, T13, T14, T14a, T16, T17, T19, T20, G25, T29. T30, T31, T32, T41, T48, T50, T52, T56, T57, T59, T60, T61, T69, T70	**GRADE C** (18) G3, T4, T5, T36, T37, T39, T43, T54, T55, T64, T65, T66, T67, T68, T72, T73, T74, T75	
Total 49 + Gx2	**Total 21 + Gx1**	**Total 3**

6.2 The primary intention is to retain the peripheral screening so that the arboreal character of the site is conserved. As can be seen on the extract from the Google Maps aerial photograph right, there is substantial tree screening to the site (outlined in yellow) from the south and east. Visibility into the site from the north is restricted by the Doncaster Road frontage building. The group of trees in the south-western corner is to be retained.

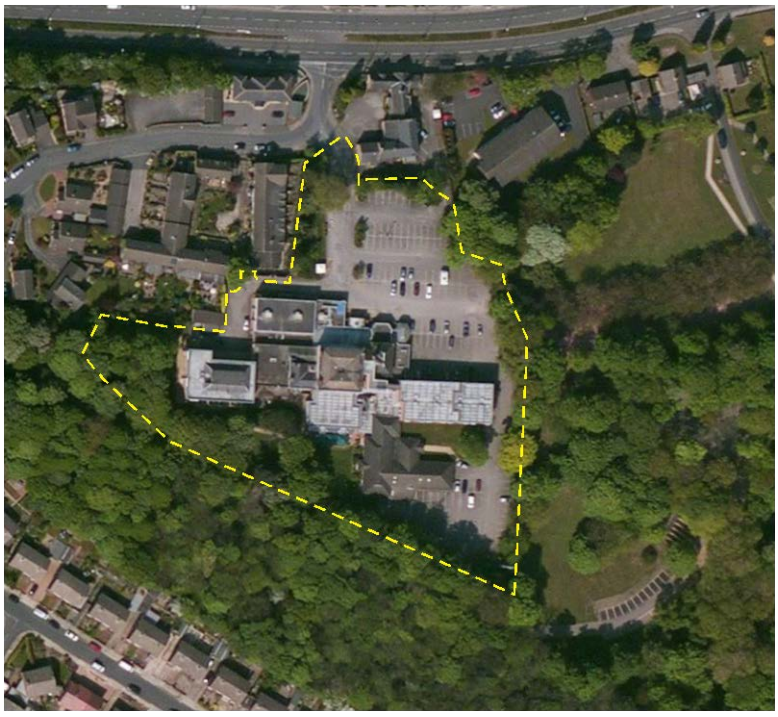

6.3 The screening from the north-west is sparse at present but with reference to Appendix C the mature sycamore T63, the horse chestnuts T69 and T70, and the London plane T72 are all retained. The only loss of screening is by the removal of the hollies T65, T66 and T67, and the cypress T68, but replacement planting is proposed. With the proximity of the neighbouring houses in mind the choice of species will either be trees of modest mature size or tree-like shrubs.

6.4 All the grade A trees are retained and only 4 of the 22 grade B trees are to be removed.

6.5 The embankment on the northern boundary with the hedging group G3 and trees T4 and T5 is to be cleared, but replanted with a hedge. It would make sense for this to be an evergreen shrub mixture, but no decision has been made as yet, and this can be left to a landscape condition.

6.6 There are no indicative proposals for tree and shrub planting within the main body of the development as part of the proposal, but the use of such planting to provide visual softening of the built form and strategic screening of certain sight lines is part of the landscape design concept and this too can be left to a landscape condition.

6.7 In summary, the loss of those trees to be removed will not detract from the landscape and will not have a detrimental visual impact upon the character and appearance of the area.

6.8 Many of the peripheral trees, both within and without the site will have lateral, pruning carried out to reduce the overhang into the site. I have shown an indication of the extent of this pruning at Appendix C with green shading. This is not intended to be accurate but to provide an impression. The actual pruning will need to be specified for tendering and the schedule will be submitted in advance for the Council's written approval. This will include remedial pruning to which I refer in paragraph 4.5 above. As this pruning work is in the interior of the site, it will not be easily discernible from without and will not diminish the landscape presence of the trees.

Post Development Pressure

7.1 The concept of post development pressure is not that routine maintenance work to maintain clearances and the proportionality of trees is unacceptable. The term should more accurately be one of irresistible post development pressure where the spatial or physical relationship of a retained tree to a structure or feature demands pruning or removal that is inappropriate, but to which the local planning authority could not reasonably refuse consent.

7.2 The spatial relationship of the proposed new buildings with the trees has been a matter of careful design. The trees along the eastern boundary are to have the crown spreads into the site reduced. The shade from sycamore T23 (on neighbouring ground) will be transient and as the line of trees extends northwards the separation from the rear elevations increases. The trees along the southern boundary are on neighbouring ground and the crown overhang will be pruned back and there are only three dwellings affected to any significant extent, and this caters for those who prefer a small shady garden. All dwellings elevations facing trees will have expansive fenestration and the interior layout design and décor will maximise light.

7.3 As I mention at paragraph 6.6 above, specimen trees will planted in strategic positions to provide screening and generally to enhance the visual amenity without becoming too large and with the potential to present problems in the future.

7.4 Where the crowns of trees are close to the proposed buildings it would be prudent to include filtration for rainwater guttering of either mesh or "bristle" inserts. This should include the incorporation of discreet ladder attachment points under the eaves and the provision of sufficient clearance between the edge of the roof and the guttering to facilitate ease of maintenance. In addition, the downpipes should be fitted with easily cleanable traps.

7.5 The conservation of the arboreal character of the site, in addition to the boundary screening which will lend an air of seclusion, and taken as a whole there will be a distinct "sense of place" and identity.

7.6 In consideration of these matters, there will be no appreciable post development pressure, and certainly none that would oblige the Council to give consent to inappropriate tree works.

Tree Protection Measures

8.1 The BS5837 gives a Root Protection Area [RPA] for each retained tree by reference to Section 4.6 in the BS. The RPA is an estimation of the area of the root system that would need to be retained to sustain the condition of the tree if all the other roots outside it were to be severed. The RPA represents a smaller proportion, (on average only a third), of a tree's root system and consequently whilst the RPA is particularly important to ensure that there are no adverse effects upon stability, if an encroachment does not reduce the overall assimilative function of the root system significantly it is unlikely to cause harm. However, as with any factor relating to trees each individual situation must be justified in site-specific terms.

8.2 The RPA is usually described as a circle with a radius (Root Protection Area Radius [RPR]) of the prescribed distance within which no unspecified activity should occur, though the shape and position of the RPA can be modified by an arboriculturist to meet individual site conditions according to the probable distribution of the tree roots. Intrusion into the RPA can take place only where the ground is adequately protected in accordance with the requirements of Section 6.2.3 of BS5837 or where work is carried out to an agreed design and working method.

8.3 Quaife Woodlands uses a tabular method to derive rounded-up RPA radii in half-metre graduations (Appendix E). I have adjusted the shapes of some RPAs where they are affected by existing structures and the river.

8.4 **RPA Encroachment** There are actually no encroachments into RPAs by any of the proposed new buildings or surfacing and accordingly there is no need for any special construction methods to be necessary.

8.5 **Tree Protection Fencing** The combined zones of RPAs form the Construction Exclusion Zone [CEZ] and will be protected by a Tree Protection Fence [TPF] comprising steel mesh panels of 1.8 metres in height ('Heras'). These panels can be mounted on a scaffolding frame as shown at Figure 2 of BS5837 (Appendix F). Where the TPF is not likely to be under pressure from construction activity the panels can be supported in a lighter manner as shown at Figure 3 of BS5837 (Appendix G).

8.6 The TPF is to be erected before any work commences on site, is to remain in situ undamaged for the duration of all work or each phase, and only to be removed once all work is completed. The only exception is the completion of soft landscaping, but if any excavations however minor, are to be carried out as part of soft landscaping within RPAs, an arboricultural assessment must be carried out beforehand and any additional arboricultural protection measures incorporated. The TPFs are to carry waterproof warning notices denying access within the CEZ.

8.7 The demolition and surface uptake can be contained within the TPF for construction and so no alteration of its position will be necessary. Where existing hard surfacing to be removed is within an RPA the working method at Appendix H will be used.

8.8 **Scaffolding** There does not appear to be any need to erect scaffolding within an RPA but should it prove to be necessary it is likely that the feet will need to be placed directly onto the ground to achieve a stable working structure. The collective footprint of the scaffolding feet on the soil will represent a minor proportion of the RPA and will not be a significant factor in terms of ground compaction.

8.9 **New Surfacing** None of the proposed new hard surfacing is within an RPA, and as I mention at paragraph 8.4 above, no special construction method is necessary.

8.10 **General Matters** The surface water run-off and soil drainage have not been studied. However, due to the site topography and soil type, I do not foresee any detrimental effects on the trees in hydrological terms as a result of this development.

8.11 I have not been advised of the underground service routes, but it seems logical to suppose that they will connect to existing service runs, or if new routes are to be installed they can avoid RPAs. Clearly if any underground service routes should need to enter an RPA, the provisions of BS5837 and NJUG 4 should be employed and if necessary, further arboricultural advice sought.

8.12 Where existing or proposed drains pass within the root system of a tree (not just the RPA), technical advice must be sought to assess the root-tightness of joints. Modern compression joints do not reliably prevent root ingress and it may be necessary to upgrade them.

8.13 The hard landscaping operations are part of the construction works and will be planned and carried out within the construction phase tree protection measures.

8.14 The protection of the trees will also include recognition of other types of potentially damaging activities, such as the storage of materials (and other substances likely to be toxic to plants), parking, site-building requirements, and the use and parking of plant. Particular care and planning is necessary to accommodate the operational arcs of excavation and lifting machinery, including their loads, especially large building components such as beams and roof trusses. Operations like these have the potential to cause incidental damage and logistical planning is essential to avoid conflicts.

8.15 One of the main tree protection considerations will be the logistical management of the site. The access to the elevations of buildings that face trees will be restricted and careful materials handling and storage, vehicle and plant access, and personnel accommodation will need attentive planning.

Conclusions

9.1 Of the 73 subject trees and 3 groups, just 21 trees and 1 group are to be removed (along with 3 U grade trees which should be removed irrespective of this proposal). Almost all of them are back from the site boundaries and their loss will have a very minor impact on the character and appearance of the area. The peripheral screening retained is substantial and no additional tree planting is necessary to augment it. Some new trees will be planted south of T71 and others will be planted within the development for the benefit of the residents and will not be visible from the outside.

9.2 The crown overhang from the southern and eastern boundaries will be reduced in spread, but this will be indiscernible from without the site. As a consequence the arboricultural landscape impact of the proposal will be neutral.

9.3 The retained trees do not cause any significant conflicts in terms of construction activities, nor will any significant issues of post development pressure be likely to emerge that could not be managed with routine maintenance.

9.4 The retained trees will all be protected in accordance with current standards and guidance, including particular with logistical planning.

9.5 For trees to be sustainable within a development proposal they must be compatible with their surroundings, not just in terms of long-term spatial relationship but also in respect of minimising any potential conflicts to matters of routine maintenance. This proposal achieves this objective.

9.6 I have taken account of the information given to me and my own observations on site and I am satisfied that this scheme is arboriculturally sound and that the long-term well-being of the retained trees will be safeguarded in a sustainable manner.

Recommendations

10.1 The successful integration of the proposal with retained trees will need to take account of the following points:

i) Plan of underground service routes.

ii) Implementation of the tree protection measures and methods set out in this Report.

iii) Site logistics plan to include storage, plant parking/stationing, materials handling.

iv) Site supervision – Following and induction meeting conducted by the project arboriculturist with all those involved in attendance, an individual, e.g. the Site Agent, will be nominated to be responsible for all arboricultural matters on site. This person must:

a) be present on site for the majority of the time,
b) be aware of the arboricultural responsibilities,
c) have the authority to stop any work that is causing, or has the potential to cause harm to any tree,
d) be responsible for ensuring that all site operatives are aware of their responsibilities toward trees on site and the consequences of any failure to observe those responsibilities,
e) make immediate contact with the local authority and/or the project arboriculturist in the event of any tree related problems occurring, whether actual or potential.

10.2 As a matter of course these points will be resolved in consultation with and subject to the approval of the planning authority through their Arboricultural Officer.

10.3 The sequence of works should be as follows:

i) initial tree works – tree removal and pruning
ii) installation of TPF
iii) demolition and site clearance
iv) installation of underground services
v) construction of new drive and other hard surfaces
vi) main construction, including hard landscaping
vii) removal of TPF
viii) soft landscaping including tree planting

The statements made in this Report do not take account of the effects of extremes of climate, vandalism or accident, whether physical, chemical or fire. Quaife Woodlands cannot therefore accept any liability in connection with these factors, nor where prescribed work is not carried out in a correct and professional manner in accordance with current good practice. The authority of this Report ceases at any stated time limit within it, or if none stated after two years from the date of the survey or when any site conditions change, or pruning or other works unspecified in the Report are carried out to, or affecting, the Subject Tree(s), whichever is the sooner.

KEY

Pre: Prefix: **T** = Tree **G** = Group **H** = Hedge

No Tree reference number.

Ht Tree Height in metres.

SD Stem diameter in centimetres at 1.5 metres above ground level or immediately above the root flare for multi-stemmed trees.

***** Estimated. **m** Multi-stemmed.

N-S-E-W Branch spread in metres to the four compass points – **Ø** average crown diameter – **o/h** overhang in metres into the site

CrB Height in metres of crown clearance above adjacent ground level.

AC Age Class **Y** – Young. **S** – Middle aged. **M** – Mature. **O** – Over-mature. **V** – Veteran.

PC Physiological Condition **G** – Good **F** – Fair **P** – Poor **D** – Dead

SC Structural Condition **G** – Good **F** – Fair **P** – Poor **D** – Dead

BS Category grading

U – Existing condition is such that any existing value would be lost within 10 years and should therefore be removed for reasons of sound arboricultural management.

A – High quality and value (40 + yrs).
1) Mainly arboricultural values 2) Mainly landscape values 3) Mainly cultural values incl. conservation.

B - Moderate quality and value (20+ years).
1) Mainly arboricultural values 2) Mainly landscape values 3) Mainly cultural values incl. conservation.

C – Low quality and value (10+ years).
Whilst C category trees will usually not be retained where they would impose a significant constraint on development, young trees with a SD of less than 15cm should be considered for relocation.

Rad Root Protection Radius in metres.

RPA Root Protection Area in square metres.

Appendix A

Arboricultural Survey AR/3251a/jq - Ardsley House Hotel, Barnsley

Appendix A

Pre	No	Species	Ht	SD	N-S-E-W	CrB	AC	PC	SC	BS	Rad	RPA	Observations
G	1	Leyland Cypress	13	<30*x3	6Ø	GL	M	G	G	B1	6.5	133	Off site. 3 Trees. South-west stem x 2.
T	2	Ash	11	35*	O/h 8	3.0	M	F	F	C	4.5	64	Off site. Dead & damaged. Forked x 2 at 1.8m. Lean to east & to west.
G	3	Holly	<8.5	<20*	4Ø	GL	M	G	G	C	2.5	20	Three clumps.
T	4	Sycamore	13	36	7-5-6-6	3.0	M	G	G	C	4.5	64	Ivy 50%.
T	5	Sycamore	11	24	5Ø	3.0	S	G	G	C	3.0	28	Asymmetric to the south.
T	6	Sycamore	15	61	6-7-3-8	4.0	M	G	F	C	7.5	177	Asymmetric to the west. Stem wound cavity at 2.5m.
T	7	Sycamore	17	29	7Ø	4.0	M	G	G	C	3.5	38	Off site.
T	8	Sycamore	17	58	9-6-7-8	3.0	M	G	G	B1	7.0	154	Off site
T	9	Sycamore	18	60*	13Ø	5.0	M	G	G	B1	7.5	177	Off site. Between fences. Ivy 25%.
T	10	Beech	17	45	7-9-9-5	2.0	M	G	G	B1	5.5	95	Off site. Between fences. Leans & asymmetric to the south-east.
T	11	Beech	7	28	4-8-6-5	1.5	M	G	G	C	3.5	38	Leans & asymmetric to the south-east. Suppressed.
T	12	Sycamore	19	63	5-7-9-7	5.0	M	G	G	B1	8.0	201	
T	13	Horse Chestnut (Red)	12.5	70*	6-5-6-3	18	M	P	P	C	8.5	227	Ivy 40%. Dieback.
T	14	Sycamore	14.5	39	3-6-5-5	2.5	M	G	G	C	5.0	79	Holly to 6m at base.
T	14a	Sycamore	14.5	25*x2	12Ø	3.0	M	G	G	C	4.5	64	Forked x 2 at 0.5m. Ivy 20%.
T	15	Turkey Oak	20	74	20Ø	3.0	M	G	G	B1	9.0	255	
T	16	Horse Chestnut	16	59	5-5-6-5	3.0	M	G	G	C	7.5	177	Forked x 3 at 3m.
T	17	Sycamore	16	45*	3-6-7-8	3.0	M	F	G	C	5.5	95	Asymmetric to the south. Ivy 15%. Minor dieback.
T	18	Oak	20	70*	5-10-10-6	3.0	M	G	G	B1	8.5	227	Off site.
T	19	Sycamore	16	28*	10Ø	o/h 0	M	G	G	C	3.5	38	Off site.
T	20	Sycamore	16	35*	o/h 6	o/h	M	G	G	C	4.5	64	Off site. Leans & asymmetric to the south. Forked x 2 at 2.5m.

Arboricultural Survey AR/3251a/jq - Ardsley House Hotel, Barnsley

Appendix A

Pre	No	Species	Ht	SD	N-S-E-W	CrB	AC	PC	SC	BS	Rad	RPA	Observations
T	21	Sycamore	14.5	<60*	19Ø	3.0	M	G	G	B1	7.5	177	Ivy 40%. Forked x multi at 4m.
T	22	Sycamore	15.5	79	12Ø	2.0	M	G	G	B1	9.5	284	Main branch has wound at 1.7m to north-west with dysfunctional column below .
T	23	Sycamore	17	60*	o/h 4	4.0	M	G	G	B1	7.5	177	Off site. 3 Stems from low fork.
T	24	Turkey Oak	17	35*	o/h 3	5.0	M	G	G	B1	4.5	64	Off site.
G	25	Ash/Cherry	13-15	<20	5-5-5-5	2.0	S	G	G	C	2.5	20	20Stems.
T	26	Beech	22	75*	o/h 4	3.0	M	G	G	A1	9.0	255	Off site.
T	27	Lime	24	38/40*	o/h 3	6.0	M	G	G	B1	7.0	154	Off site. 2 Stems.
T	28	Sycamore	22	35/38*	o/h 2	12.0	M	G	G	B1	6.5	133	Off site. Forked x 2 at ground level.
T	29	Sycamore	17	33*	o/h 7	3.0	M	G	G	C	4.0	50	Off site. Leans & asymmetric to the north.
T	30	Sycamore	15	37*	o/h 9	3.0	M	G	G	C	4.5	64	Off site. Leans & asymmetric to the north.
T	31	Sycamore	16	22*	o/h 8	3.0	M	G	G	C	3.0	28	Off site.
T	32	Sycamore	17	38*	o/h 7	3.0	M	G	G	C	5.0	79	Off site.
T	33	Sycamore	19	40*	o/h 8	4.0	M	G	G	B1	5.0	79	Off site.
T	34	Cypress	14	<30*	4Ø	GL	M	G	G	B1	4.0	50	Off site.
T	35	Lime	24	86	20Ø	6.0	M	G	F	B1	10.5	346	Tear scar on bole to the west. Major lateral to south-east at 2.5m. Elbow lateral to south-east at 4.5m.
T	36	Cherry	13	19	4-3-5-2	1.8	S	G	G	C	2.5	20	Leans & asymmetric to the north-east. Suppressed.
T	37	Horse Chestnut	17	55	7-0-6-5	2.5	M	F	F	C	7.0	154	Leans & asymmetric to the north.
T	38	Sycamore	17	65	8-9-7-6	5.0	M	G	G	B1	8.0	201	Forked x 2 at 6m.
T	39	Cypress	5	<15*	3Ø	GL	S	G	F	C	2.0	13	
T	40	Horse Chestnut	19	65*	o/h 6	5.0	M	G	F	B1	8.0	201	Off site. Forked x 3 at 3.5m.

Arboricultural Survey AR/3251a/jq - Ardsley House Hotel, Barnsley

Appendix A

Pre	No	Species	Ht	SD	N-S-E-W	CrB	AC	PC	SC	BS	Rad	RPA	Observations
T	41	Corsican Pine	17	44	10Ø	12.0	M	G	G	C	5.5	95	Asymmetric to the west.
T	42	Ash	20	51	12-7-10-8	3.0	M	G	G	B1	6.5	133	Leans & asymmetric to the north. Forked x 2 at.4.5m.
T	43	Horse Chestnut	19	63	5-7-7-7	2.5	M	P	F	C	8.0	201	Torsion scars on bole. Minor exudations.
T	44	Horse Chestnut	19	68*	7-5-7-7	3.0	M	P	F	U	-	-	Leans & asymmetric to the north-east.
T	45	Sycamore	21	57	16Ø	6.0	M	G	G	A1	7.0	154	
T	46	Beech	24	77	21Ø	2.0	M	G	F	A1	9.5	284	Forked x 2 at 4m.
T	47	Oak	20	58	20Ø	GL	M	G	G	A1	7.0	154	Ivy 10%.
T	48	Lime	18	35	12Ø	GL	M	G	G	C	4.5	64	
T	49	Beech	22	77	18Ø	5.0	M	G	G	A1	9.5	284	
T	50	Lime	20	42	12Ø	5.0	M	G	G	C	5.0	79	Leans to the west. Dead & damaged wood. Basal shoots ^ epicormic
T	51	Horse Chestnut	17	30	6Ø	2.0	M	P	P	U	-	-	Basal scar to the west & leans to the east.
T	52	Horse Chestnut	20	75	3--9-9-3	2.0	M	G	F	C	9.0	255	Tight fork at 2m. Leans & asymmetric to the south-east. Consider removal.
T	53	Sycamore	20	79	12-9-10-7	4.0	M	G	G	A1	9.5	284	
T	54	Sycamore	15	46	6-4-6-2	2.5	M	G	G	C	5.5	95	Asymmetric to the north-east.
T	55	Wych Elm	11	19/21	9Ø	1.8	S	G	G	C	3.5	38	Forked x 2 at 0.75m.
T	56	Sycamore	19	54	7-7-5-5	5.0	M	G	F	C	6.5	133	Fire scar to east at 0.5 to 2m
T	57	Lime	19	44	8Ø	2.0	M	G	G	C	5.5	95	
T	58	Sycamore	20	58	7-4-6-6	2.0	M	G	G	B1	7.0	154	Curved stem.
T	59	Horse Chestnut	20	50	10Ø	3.0	M	G	F	C	6.0	113	Leans & asymmetric to the south-east.
T	60	Lime	20	54	7-3-6-6	2.5	M	G	G	C	6.5	133	

Arboricultural Survey AR/3251a/jq - Ardsley House Hotel, Barnsley

Appendix A

Pre	No	Species	Ht	SD	N-S-E-W	CrB	AC	PC	SC	BS	Rad	RPA	Observations
T	61	Horse Chestnut	14	34	5-2-5-4	2.0	M	F	F	C	4.5	64	Stem cavity at 1.6m to west. Distorted top.
T	62	Horse Chestnut	14	66	6-6-0-11*	3.0	M	F	P	U	-	-	Major bark loss. Dead eastern stem (truncated) forked x 2 at 2m.
T	63	Sycamore	14	50	7-7-8-4	3.0	M	G	G	B1	6.0	113	Off site.
T	64	Blue Cypress	6.5	16	1.5Ø	GL	M	G	G	C	2.0	13	
T	65	Holly	8	<30*	7Ø	GL	M	G	G	C	4.0	50	Multi-stemmed.
T	66	Holly	5.5	<25*	7Ø	GL	M	G	G	C	3.0	28	Multi-stemmed.
T	67	Holly	7	<30*	6Ø	GL	M	G	G	C	4.0	50	
T	68	Cypress	7	25	6Ø	GL	M	G	G	C	3.0	28	
T	69	Horse Chestnut (Red)	12	54	8Ø	1.8	M	F	F	C	6.5	133	Basal decay.
T	70	Horse Chestnut (Red)	13	50	9Ø	1.8	M	F	F	C	6.0	113	
T	71	London Plane	16.5	90*	8-8-9-8	3.0	M	G	G	B1	11.0	380	Leans & asymmetric to the east.
T	72	Cherry	4	19	3.5Ø	1.5	S	G	G	C	2.5	20	
T	73	Cherry	5.5	16	3.5	1.5	S	G	G	C	2.0	13	Asymmetric to the south-east.
T	74	Cherry	5.5	22	3.5Ø	1.5	S	G	G	C	3.0	28	
T	75	Cherry	4	15	3.5Ø	1.5	S	G	G	C	2.0	13	

Quaife Woodlands **Arboricultural Survey AR/3251a/jq**

Ardsley House Hotel, Doncaster Road, Barnsley, South Yorkshire, S71 5EH

Site Plan - Existing Layout

Scale 1:500 approximately @ A3 27th July, 2015

0 10 20 30 40 50 metres

Scaling accuracy is sufficient for planning purposes but this drawing should not be used for construction

This plan is drawn in colour so monochrome reproduction may be unreliable

Appendix B

DONCASTER ROAD

Earlsmere Drive

SITE BOUNDARY

ARDSLEY HOUSE HOTEL

NO PARKING

Horse Chestnut saplings to 5m

Sycamore saplings to 6m

6 x Cypresses to 3.5m

Beeches to 14m

Holly to 6m

Laurel and Elder to 4m

Cypresses to 4m

Laurel to 3.5m

Leylandi Cypress hedge to 7m on other side of boundary fence

T2 on other side of boundary fence

Ash to 9m Elm to NE

Holly to 6m

Cellphone Relay Station

NORTH

T1 T2 T3 T4 T5 T6 T7 T8 T9 T10 T11 T12 T13 T14 T14a T15 T16 T17 T18 T19 T20 T21 T22 T23 T24 T25 T26 T27 T28 T29 T30 T31 T32 T33 T34 T35 T36 T37 T38 T39 T40 T41 T42 T43 T44 T45 T46 T47 T48 T49 T50 T51 T52 T53 T54 T55 T56 T57 T58 T59 T60 T61 T62 T63 T64 T65 T66 T67 T68 T69 T70 T71 T72 T73 T74 T75 G1 G3 G25

Existing Building

Existing Hard Surfacing

Existing Grass/Border

BS 5837:2012 Tree Categories

- U Tree that should be removed
- A Tree that is highly desirable for retention
- B Tree that is desirable for retention
- C Tree of no particular merit, could be retained
- Tree not surveyed

Quaife Woodlands **Arboricultural Survey AR/3251a/jq**

Ardsley House Hotel, Doncaster Road, Barnsley, South Yorkshire, S71 5EH

Site Plan - Proposed Layout with Tree Protection Measures

Scale 1:500 approximately @ A3 27th July, 2015

0 10 20 30 40 50 metres

Scaling accuracy is sufficient for planning purposes but this drawing should not be used for construction

This plan is drawn in colour so monochrome reproduction may be unreliable

Appendix C

DONCASTER ROAD

Earlsmere Drive

G1

T2 on other side of boundary fence

SITE BOUNDARY

Indicative New Hedge Planting

Leylandi Cypress hedge to 7m on other side of boundary fence

Horse Chestnut saplings to 5m

Sycamore saplings to 6m

6 x Cypresses to 3.5m

Beeches to 14m

Holly to 6m

Laurel and Elder to 4m

Cypresses to 4m

Laurel to 3.5m

Ash to 9m leaning to NE

Holly to 6m

T1 T2 T3 T4 T5 T6 T7 T8 T9 T10 T11 T12 T13 T14 T14a T15 T16 T17 T18 T19 T20 T21 T22 T23 T24 T25 T26 T27 T28 T29 T30 T31 T32 T33 T34 T35 T36 T37 T38 T39 T40 T41 T42 T43 T44 T45 T46 T47 T48 T49 T50 T51 T52 T53 T54 T55 T56 T57 T58 T59 T60 T61 T62 T63 T64 T65 T66 T67 T68 T69 T70 T71 T72 T73 T74 T75 G3 G25

PLOT 1 CHATSWORTH RENDER

PLOT 2 SWALEDALE BRICK

PLOT 3 RICHMOND BRICK

PLOT 4 CHATSWORTH RENDER

PLOT 5 CHATSWORTH BRICK

PLOT 6 SWALEDALE RENDER

PLOT 7 CHATSWORTH RENDER

PLOT 8 RICHMOND BRICK

PLOT 9 HAMPTON RENDER

PLOTS 10-12 BIRCH RENDER

PLOTS 13-14 MULBERRY BRICK

PLOTS 15-16 MULBERRY BRICK

PLOTS 18-19 FEATURE RENDER

PLOT 17 RICHMOND RENDER

PLOT 20 SWALEDALE BRICK

PLOT 21 RICHMOND BRICK

PLOT 22 CHATSWORTH BRICK

PLOT 23 CHATSWORTH RENDER

PLOT 24 RICHMOND BRICK

PLOT 25 SWALEDALE RENDER

PLOT 26 CHATSWORTH BRICK

PLOT 27 RICHMOND RENDER

BLOCK PAVING

TARMAC

2NO. RING SOAKAWAY

Cellphone Relay Station

NORTH

- Retained Tree
- Removed Tree
- Root Protection Area
- Circular/Adjusted
- Tree Protection Fence CONSTRUCTION
- Construction Exclusion Zone
- Indicative Extent of Lateral Crown Reduction
- Proposed New Dwelling
- Proposed New Hard Surfacing - drive/parking
- Existing Building
- Existing Hard Surfacing

Appendix E

BS5837:2012 (Paragraph 4.6.1)
Root Protection Area radii in ½ metre graduations

The ½ metre graduations of RPA radii have been calculated back to produce diameter dimensions, which in turn have been rounded down to the nearest centimetre. If the BS5837 multiplier factor is plotted on a graph it produces a straight gradient and if the ½ metre steps are plotted they are all above that line, thus ensuring that the RPA radii err on the generous side.

Single Stem up to diameter (mm)	*RPA Radius (m)*	*RPA (m^2)*
1250	**15.0**	**707**
1210	**14.5**	**660**
1170	**14.0**	**616**
1120	**13.5**	**573**
1080	**13.0**	**531**
1040	**12.5**	**491**
1000	**12.0**	**452**
960	**11.5**	**416**
920	**11.0**	**380**
870	**10.5**	**346**
830	**10.0**	**314**
790	**9.5**	**284**
750	**9.0**	**255**
710	**8.5**	**227**
670	**8.0**	**201**
620	**7.5**	**177**
580	**7.0**	**154**
540	**6.5**	**133**
500	**6.0**	**113**
460	**5.5**	**95**
420	**5.0**	**79**
370	**4.5**	**64**
330	**4.0**	**50**
290	**3.5**	**38**
250	**3.0**	**28**
210	**2.5**	**20**
160	**2.0**	**13**

Appendix F

Extract from British Standard 5837: 2012
Trees in relation to design, demolition and construction - Recommendations

Figure 2. **Default specification for Tree Protection Barrier**
Indicated framework support as the usual method of support for steel mesh panels ('Heras'). Some variation can be employed if appropriate, such as support by wooden posts (75mm x 75mm x 2.75m) dug or concreted into the ground (dry mix concrete contained within a plastic bag), or if there is no pressure of access a lighter form of netting on driven stakes.

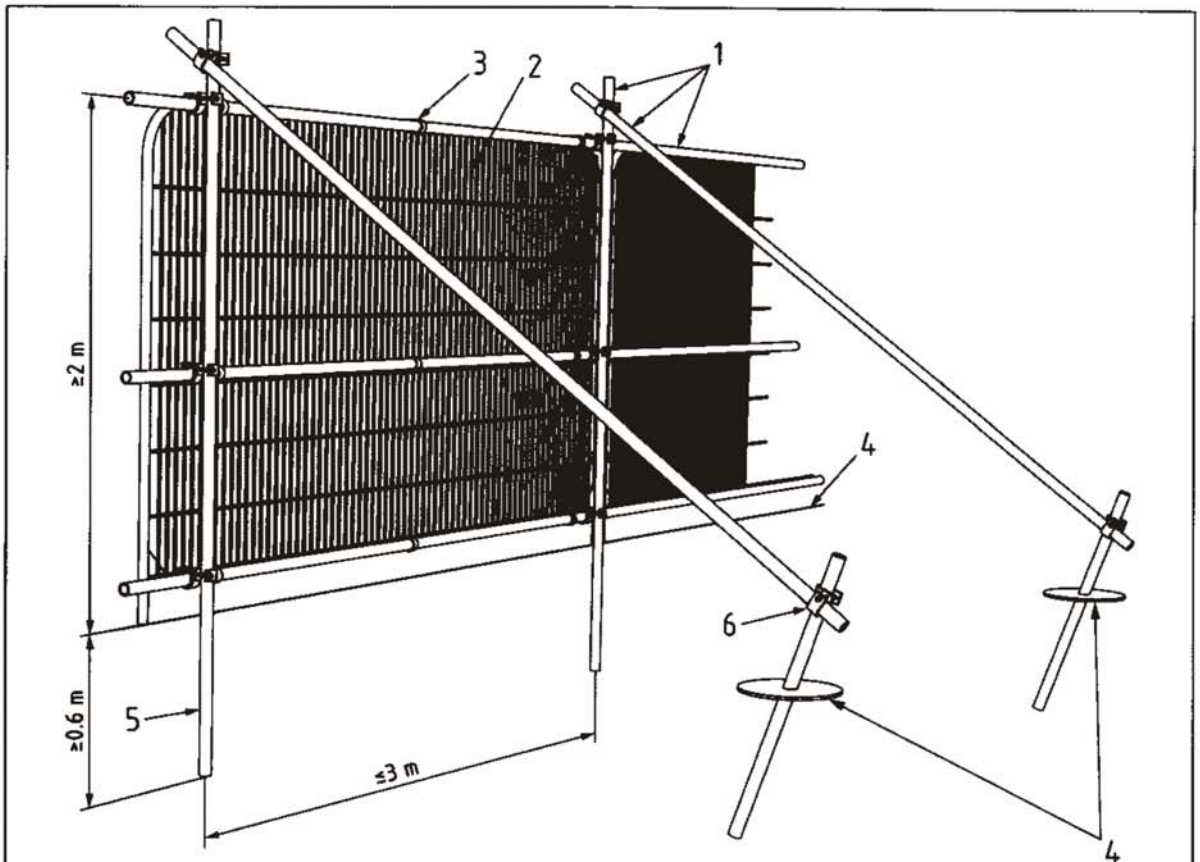

Key

1 Standard scaffold poles
2 Heavy gauge 2 m tall galvanized tube and welded mesh infill panels
3 Panels secured to uprights and cross-members with wire ties
4 Ground level
5 Uprights driven into the ground until secure (minimum depth 0.6 m)
6 Standard scaffold clamps

Figure 3 **Examples of above-ground stabilizing systems**

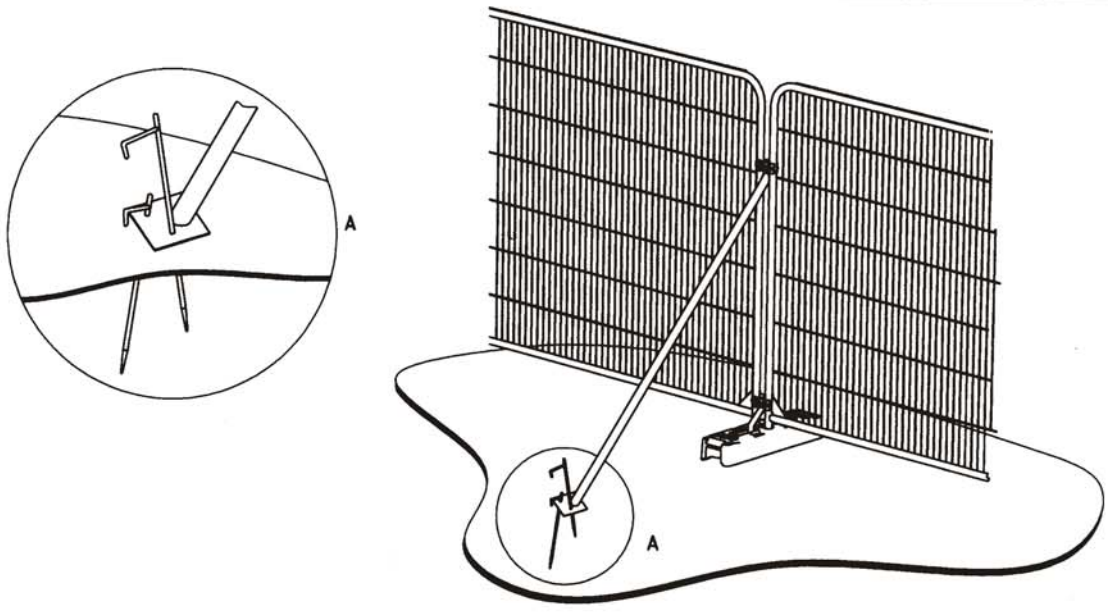

a) Stabilizer strut with base plate secured with ground pins

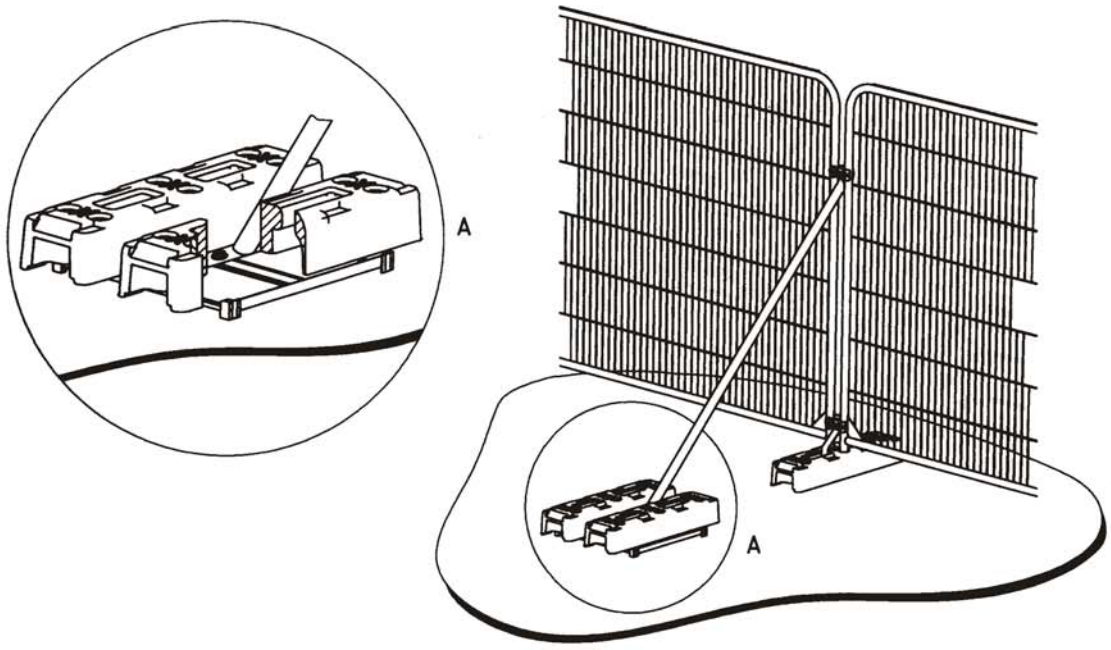

b) Stabilizer strut mounted on block tray

Appendix H

Method Statement for the uptake of hard surfacing and buildings near to trees

[RPA refers to the Root Protection Area as specified in the Report]

1. The uptake of the existing surfacing and buildings should be carried out from outside the RPA whenever possible and from within the footprint of the existing surfacing or building where within the RPA of a tree.

2. The excavation of the material must not extend into the soil underneath. In practical terms the bucket of the excavator must be used so that the teeth are horizontal so that any disturbance of the underlying soil is kept to an absolute minimum. Where the surfacing is very thin and/or roots are very near the surface, the digging should be done manually.

3. The rubble must not be stockpiled within the RPA of the tree and must be exported without crossing the RPA.

4. Due care and planning must be taken to ensure that the operational arcs of excavators do not damage the crowns of retained trees.

5. Where new surfacing is to be installed, if the depth of the old surface is insufficient, the wearing surface may need to be higher than existing in order to accommodate the appropriate thickness. There may be a requirement for a geo-textile membrane to be laid on the soil surface, but this is an engineering matter dependent upon soil type. The separation is beneficial for root development.

6. Where the old surface is taken up and not replaced, the infill should be of good quality topsoil laid without compaction.