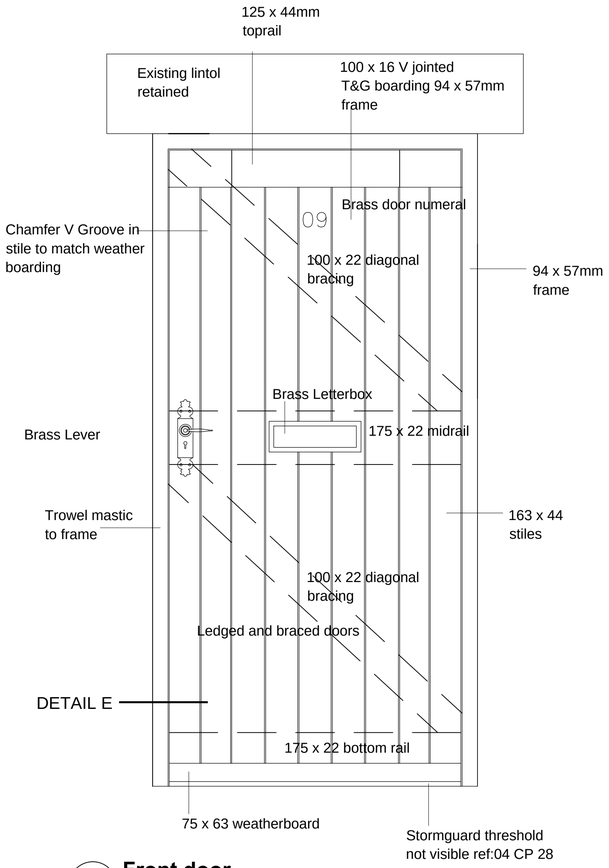

01 Front door

1:10

CONSTRUCTION NOTES:
All timbers to be vac-vac treated primed; painted/ undercoat and 2 coats gloss antique white.

Ironmongery
One half pairs 102 x 76mm SAA steel butt hinges
76mm 5 lever mortice sashlock
Brass antique lever
Brass antique letterplate
Brass antique inner flap
Brass antique numeral
Jim Lawrence Ironmongery 01473 826685

Stormguard slimline wide 04 CP 218
Slimline wide Matt Gold Effect
Tel:01625 613311

NOTE
JOINER TO CHECK ALL STRUCTURAL OPENING SIZES AND VERIFY SETTING OUT DIMENSIONS ON SITE.

DETAILS SUBJECT TO PLANNING AND LISTED BUILDINGS APPROVAL

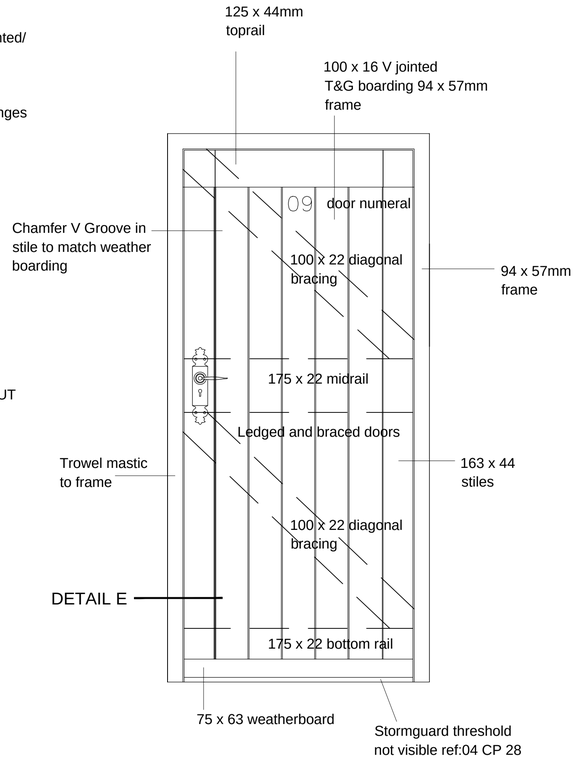

02 Rear door

1:10

KEY PLAN

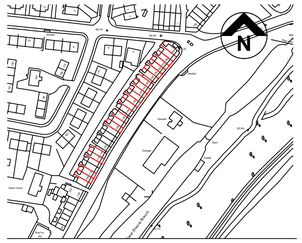

Notes:
.

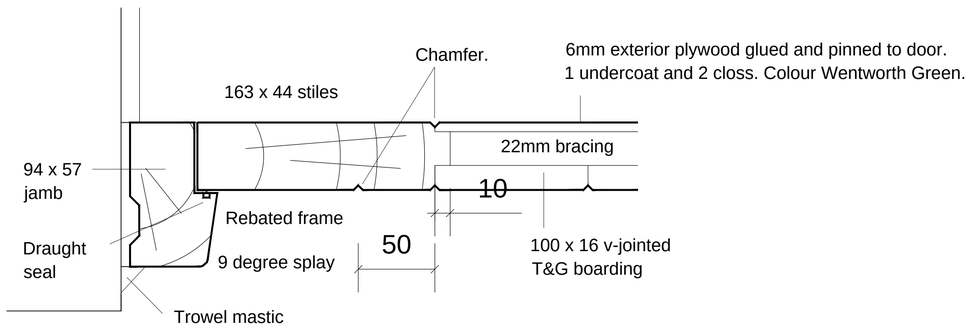

03 Door jamb detail

1:2

Planning and listed buildings application						
P1	PHepp	29.6.17	SBL	29.6.17	LS	29.6.17
COMMENT						
REV	DRAWN	DATE	CHECKED	DATE	APPROVED	DATE

THIS DRAWING IS PRODUCED FOR USE IN THIS PROJECT ONLY AND MAY NOT BE USED FOR ANY OTHER PURPOSE. NPS PROPERTY CONSULTANTS LTD ACCEPT NO LIABILITY FOR THE USE OF THIS DRAWING OTHER THAN THE PURPOSE FOR WHICH IT WAS INTENDED IN CONNECTION WITH THIS PROJECT AS RECORDED IN THE 'PURPOSE FOR ISSUE' AND 'FILE STATUS CODE'.

THIS DRAWING MAY NOT BE REPRODUCED IN ANY FORM WITHOUT PRIOR WRITTEN AGREEMENT OF NPS PROPERTY CONSULTANTS LTD.

© CROWN COPYRIGHT AND DATABASE RIGHTS 2017 ORDNANCE SURVEY LICENCE NUMBER 100022264

RESPONSIBILITY IS NOT ACCEPTED FOR OTHERS SCALING DIRECTLY FROM THIS DRAWING. DO NOT SCALE FROM THIS DRAWING, USE WRITTEN DIMENSIONS ONLY.

0mm 100 200 300 600mm
1:10
0mm 20 40 60 120mm
1:2

ORIGINAL SHEET SIZE A1

CLIENT
Berneslai Homes

TITLE
118 Wath Road; Elsecar; Barnsley.
Proposed door details.

PROJECT
Listed Buildings Consent - Replacement doors and windows

nps group
NPS Barnsley Ltd
Gateway Plaza, Sackville St, Barnsley, South Yorkshire, S70 2RD.
Tel: 01226 774605; Email: barnsley@nps.co.uk
web:www.nps.co.uk

SCALES	DISCIPLINE	PROJECT NUMBER
1:10 / 1:2	ARCHITECT	18-1-1013
DRAWING NUMBER		REV CODE
NPS-DR-A-(00)-144		P1
STATUS CODE	PURPOSE OF ISSUE	DRAWN BY
S4	PLANNING APPROVAL	Phepp

File Path: G:\Working Documentation - Projects\Design Folder\2018_Projects\07-17-18-1-1013 Wath Road Door and Window replacement LBC\2.02_Drawings\1.0_Architects\04_Sheet\1811013-NPS-XX-00-DR-A-144 Proposed door details.dwg, Saved: 07 July 2017 16:23:30, By: Heppenstall , Philip

Date Plotted: 21 July 2017 13:21:52

© COPYRIGHT NPS GROUP 2017