Endurance wind power
we power the future

Turbine

Configuration	3 blades, horizontal axis, downwind
Rated power @ 9.5 m/s	50kW
Applications	Direct grid-tie
Rotor speed	42 rpm
Cut-in wind speed	3.5 m/s (7.8 mph)
Cut-out wind speed	25 m/s (56 mph)
Survival wind speed	52 m/s (116 mph)
Overall weight	3 990 kg (8 800 lbs)

Rotor

Rotor diameter	19.2 m (63.0 ft)
Swept area	290 m² (3120 ft²)
Blade length	9.00 m (29.5 ft)
Blade material	Fiberglass/Polyester
Power regulation	Stall control (constant speed)

Generator

Type	Induction generator
Configurations	3ϕ, 480 VAC or 600 VAC @ 60 Hz 3ϕ, 400 VAC @ 50 Hz Single phase available, please enquire

Brake & Safety Systems

Main brake system	Rapid fail-safe dual mechanical brakes
Secondary safety	Pitch control system (for over-speed regulation) using passive, spring-loaded mechanism
Automatic shut down triggered by :	- High wind speed - Grid failure - Over-speed - All other fault conditions

Controls

Control System	Programmable logic controller (PLC)
User interface	Wireless or wired network software interface for remote monitoring and control

Warranty

Turbine & controls	5 years parts and labour

Towers

Types	Free-standing monopole: 24m (80ft), 30.5 m (100 ft), 36.5 m (120 ft), 42.7 m (140 ft) Free-standing lattice: 30.5 m (100 ft), 36.5 m (120 ft), 42.7 m (140 ft)[1]
Maintenance access	Safe climbing system Working space inside the nacelle tower-top work platform

[1]Available tower sizes vary by region. Contact your local Wind Specialist for more details.

Power Curve

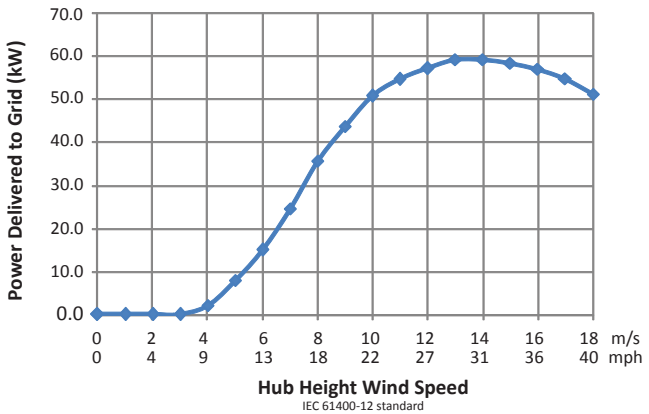

Annual Energy Production (AEP)

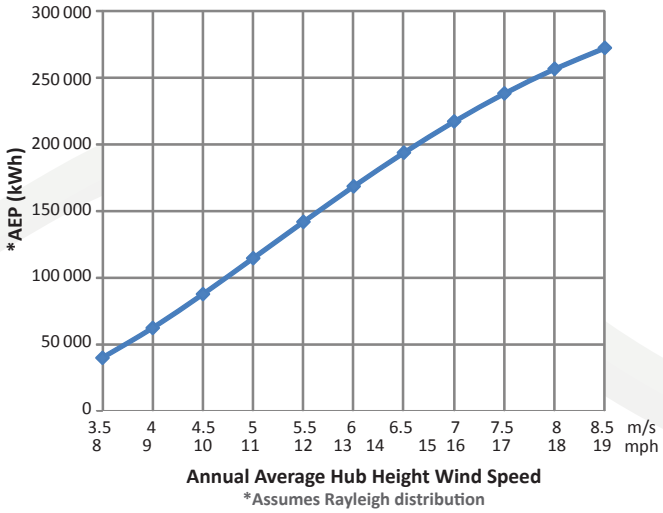

Annual Average Hub Height Wind Speed (m/s)	Annual Energy Production (kWh)
3.5	40 100
4.0	62 500
4.5	88 000
5.0	114 900
5.5	142 200
6.0	168 900
6.5	194 300
7.0	217 700
7.5	238 800
8.0	257 200
8.5	273 000

Wind Speed Conversion Table

m/s	4	5	6	7	8	9	10	11	12	14
km/h	14	18	22	25	29	32	36	40	43	50
mph	9	11	13	16	18	20	22	25	27	31

Authorized to represent:
Endurance wind power

earthmill.co.uk
Renewable Energy Solutions

Your local authorized dealer:
Earthmill Ltd
Telephone number: 0845 359 9007
Web address: www.earthmill.co.uk

Endurance wind power

we power the future

E-3120 50kW Wind Turbine

The Endurance E-3120 wind turbine is designed to produce renewable energy efficiently, reliably, safely, and quietly. This turbine is ideal for larger farms, schools, hospitals, and commercial/industrial sites, and will produce 100,000 - 250,000 kWh per year in appropriate winds.

green energy that works

CE

www.endurancewindpower.com

E-3120 Benefits

- Reduces the environmental footprint of your electrical energy supply
- Eligible for renewable energy credits
- Promotes community sustainability values
- Lowers and stabilizes energy costs
- Provides energy independence

AWEA BUSINESS MEMBER | canwea CANADIAN WIND ENERGY ASSOCIATION | ASSOCIATION CANADIENNE DE L'ÉNERGIE ÉOLIENNE | renewableUK Member 2010

E-3120 50kW Wind Turbine

1. Anemometer and wind vane
2. Lightning rod
3. Nacelle control cabinet
4. Induction generator
5. Fail-safe disk brake system
6. Gearbox
7. Access ladder
8. Yaw damper
9. Pitch control safety system
10. Fiberglass blade
11. Tower

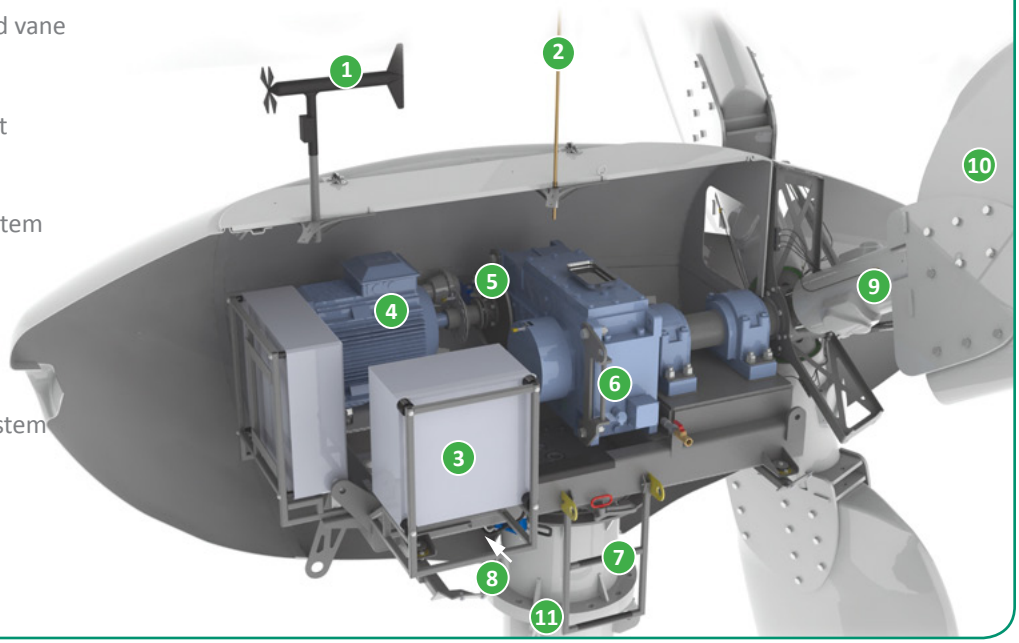

1 Anemometer and wind vane

Measures wind speed and direction to control starting, stopping, and orientation of the turbine to maximize power production.

2 Lightning rod

Guides lightning to the ground, protecting the turbine.

3 Nacelle control cabinet

Houses the tower-top electronics in a weather-protected environment for maximum reliability. The main turbine control panel is located at the base of the tower for easy access.

4 Induction generator

Delivers grid-compatible power and eliminates the need for an inverter or other power electronics. This improves efficiency and reliability, and reduces up-front costs.

5 Fail-safe disk brake system

Safely stops the wind turbine using twin brake calipers in situations such as extreme wind or grid failure.

6 Gearbox

Drives the generator at full speed while the rotor turns slowly. The gearbox uses rugged, conventional design for long life and high reliability.

7 Access ladder

Allows easy and safe access to the nacelle for maintenance. Safety is a top design priority.

8 Yaw damper

While the turbine is aerodynamically oriented by the wind, the yaw damper smooths the movement to ease tower and rotor loads.

9 Pitch control safety system

Provides backup protection against rotor over speed. If the rotor turns too fast for any reason, the blades are pitched by a spring mechanism to control the speed.

10 Fiberglass blade

Designed to quietly and efficiently produce energy, particularly in light winds.

11 Tower

Attractive monopole or economical lattice towers are available in sizes from from 24 to 42.7 meters (80 to 140 feet) to comply with height restrictions or reach the best winds at your site.

Cornerstones of Endurance Design

Production Efficiency

Most distributed wind customers did not select their site for wind resources, but look to generate power from the wind available to them. Endurance wind turbines are designed specifically for less-than-perfect wind conditions.

Swept Area
The blades capture the energy of the wind. The larger the rotor diameter, the more wind energy the turbine captures. The Endurance E-3120 has a 19m (63 ft) rotor diameter- one of the largest rotor diameters per rated kW in its class- to capture the most wind energy.

Motoring
Motoring starts the blades spinning so the turbine operates in lighter wind conditions than if it relied solely on the wind to start (3-phase models only).

Generator Type
The induction generator produces electricity that can be transferred to the power grid without inverters. This provides lower equipment and maintenance costs and increases overall power production.

Reliability

All Endurance turbines have been extensively tested to ensure customers receive dependable energy production. They are built with proven commercial components for durability and easy support in the future.

Five Year Warranty
Endurance offers one of the best warranties in the wind industry, covering all defective components and labor for five years.

Safe Operation

When the turbine control system detects any fault, such as high wind or a grid power loss, the dual caliper disc brake system activates, safely stopping the turbine until the condition is cleared.

Passive Stall Rotor Design
The fixed-speed rotor aerodynamically stalls the blades as the first layer of protection for the turbine during high winds.

Control and Remote Interface Software
Each Endurance wind turbine is operated safely by an onboard computer system with advance control logic. This system also records data including energy production, average power, wind speed and event history. Turbine controls and data are also remotely available from a web browser.

Quiet Operation

Quiet operation is essential for a wind turbine in a community environment. Endurance turbines use slowly turning blades and high-quality manufactured components to make them the quietest turbines in their class.

Clean Aesthetics

A wind turbine makes a powerful statement about your commitment to the environment and clean energy. Endurance wind turbines have clean lines and make an attractive addition to any landscape.