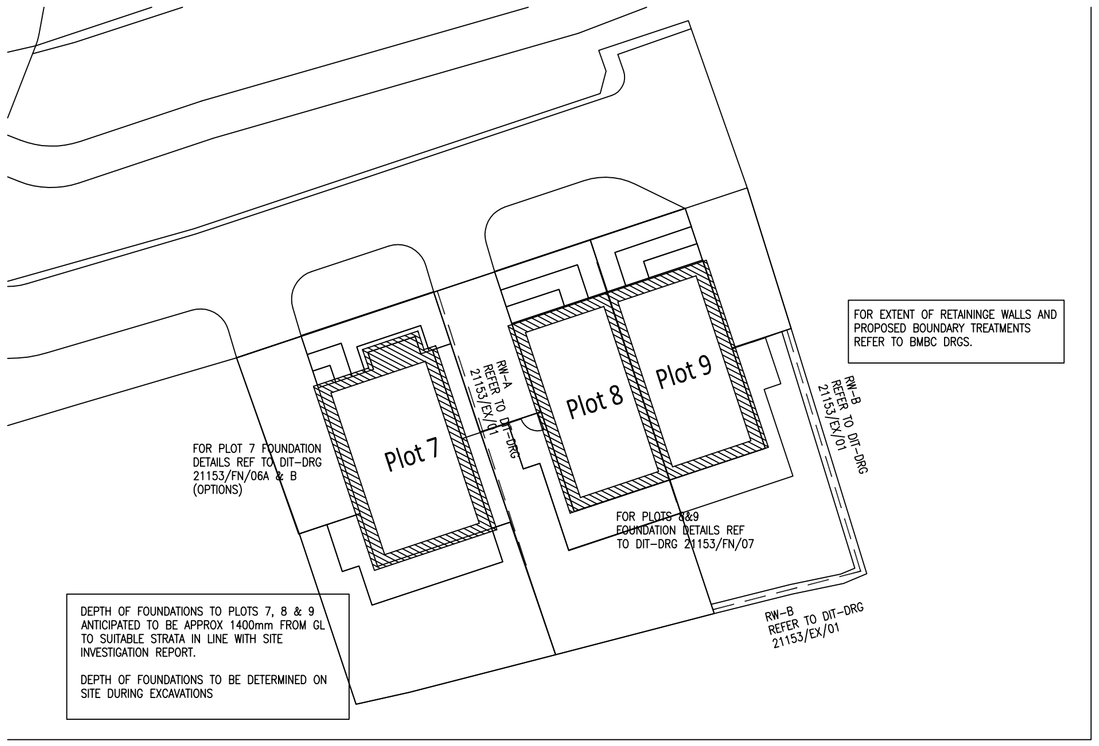

INDICATIVE REFERENCE PLAN

REFER TO ARCHITECTS DRGS & SHAUN TONGE DRGS FOR EXTERNAL LEVELS AND REQD FINISHES

UPPER BOUNDARY FENCE TO ARCHITECTS DETAILS, MAX HEIGHTS 600mm
NOTE WALL DETAIL NOT SUITABLE FOR FENCE PANELS ANY HIGHER THAN 3 FOOT

* ALL FOUNDATION DEPTHS TO BE APPROVED BY BUILDING CONTROL PRIOR TO CASTING FOUNDATION

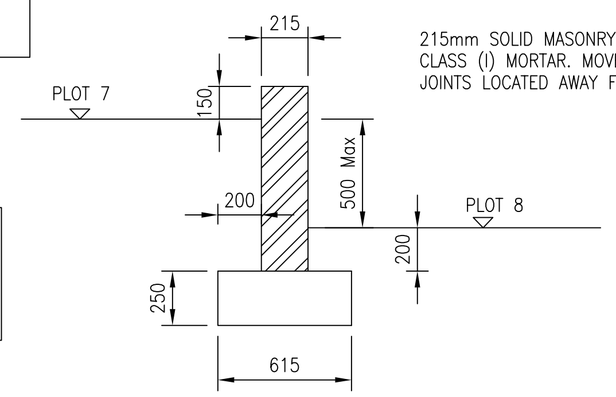

215mm SOLID MASONRY WALL TO ARCHITECTS SPEC.
CLASS (I) MORTAR. MOVEMENT JOINTS IN WALL AT MAX 8m c/c.
JOINTS LOCATED AWAY FROM POST LOCATIONS.

TYPICAL SECTION THROUGH RW-A
BETWEEN PLOTS 7&8

WALL DETAIL (MAX 500mm)
SUITABLE FOR HIGHWAY LOAD

GENERAL NOTES –

1–ALL FOUNDATIONS TO BEAR IN THE NATURAL UNDERLYING FIRM TO STIFF CLAY, OR WEATHERED SILTSTONE. DEPTHS TO BE DETERMINED ON SITE AND APPROVED BY BUILDING CONTROL. REFER TO INDIVIDUAL PLOT DRAWINGS FOR ANTICIPATED DEPTHS.

2–ALL FOUNDATIONS TO BE MIN 900mm TO UNDERSIDE. REFER TO PLOT DETAILS FOR MIN REQUIREMENTS AS DEPTHS MAY VARY. CONTRACTOR TO ALLOW FOR POSSIBLE BURIED HISTORIC FOUNDATIONS / OBSTRUCTIONS. REFER TO DRG NOTES.

3–ALL CONCRETE TO BE MIN. DESIGNATED MIX FND2
MIN STRENGTH CLASS – C25/30
MIN W/C RATIO – 0.5
MIN CEMENT CONTENT – 340 kg/m3

4–IF ANY SOFT SPOTS ARE ENCOUNTERED THESE ARE TO BE REMOVED AND FILLED WITH TYPE 1 STONE AND WELL COMPACTED IN LAYERS OF MAX 150mm

5–REFERENCE SHOULD BE MADE TO ALL BMBC AND SHAUN TONGE ENGINEERING DRAWINGS FOR EXTENT AND DETAILS OF PROPOSED BOUNDARY TREATMENTS, LEVELS AND FINISHES. IF THERE ARE ANY DISCREPANCIES THESE SHOULD BE BROUGHT TO THE ATTENTION OF THE ARCHITECT (LEAD CONSULTANT).

6–ALL LEVELS AND SETTING OUT TO ARCHITECTS DETAILS

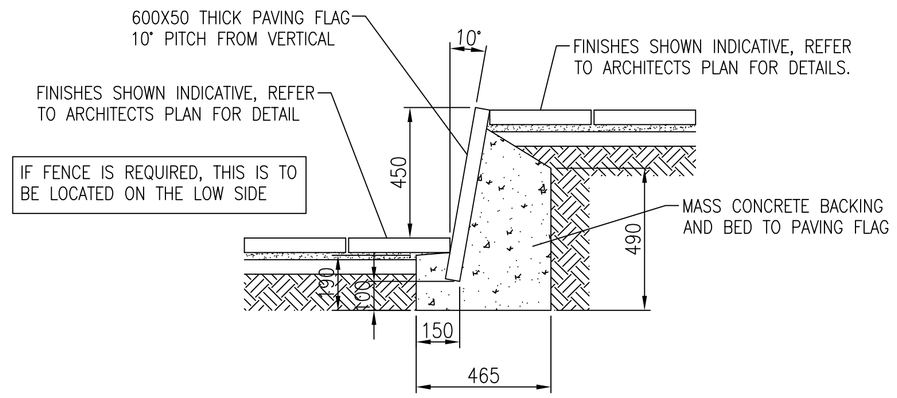

MAXIMUM RETENTION 450 (NOT TO BE ADJACENT TO PARKING AREAS UNLESS SHOWN OTHERWISE)

GENERIC FLAG ON EDGE DETAIL
LOCATIONS TO BE CONFIRMED BY ARCHITECT

REFER TO ARCHITECTS DRGS & SHAUN TONGE DRGS FOR EXTERNAL LEVELS AND REQD FINISHES

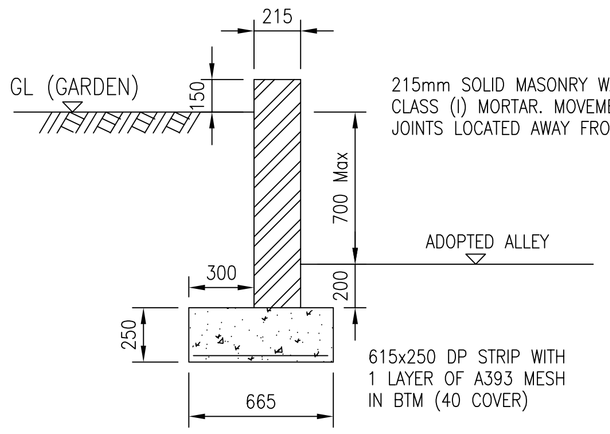

215mm SOLID MASONRY WALL TO ARCHITECTS SPEC.
CLASS (I) MORTAR. MOVEMENT JOINTS IN WALL AT MAX 8m c/c.
JOINTS LOCATED AWAY FROM POST LOCATIONS.

615x250 DP STRIP WITH 1 LAYER OF A393 MESH IN BTM (40 COVER)

SECTION THROUGH WALL RW–B

WALL NOT SUITABLE FOR RETAINING TO HIGHWAYS OR ACCESS ROADS

* ALL FOUNDATION DEPTHS TO BE APPROVED BY BUILDING CONTROL PRIOR TO CASTING FOUNDATION

WALL NOT SUITABLE FOR RETAINING TO HIGHWAYS OR ACCESS ROADS

REFER TO ARCHITECTS DETAILS FOR FENCE TYPE AND DETAILS.
POSTS AT APPROX 1.8m

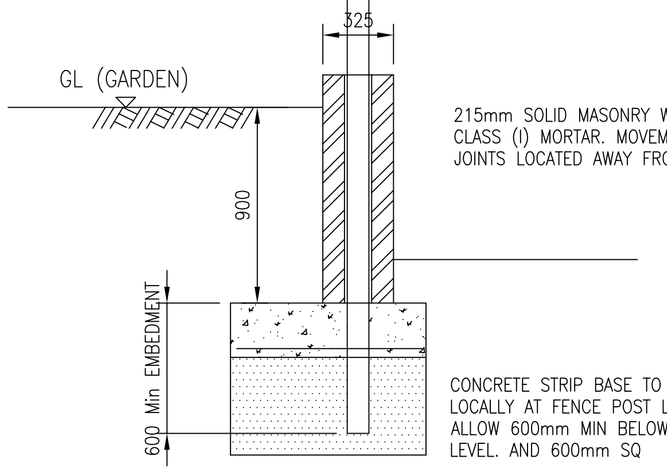

215mm SOLID MASONRY WALL TO ARCHITECTS SPEC.
CLASS (I) MORTAR. MOVEMENT JOINTS IN WALL AT MAX 8m c/c.
JOINTS LOCATED AWAY FROM POST LOCATIONS.

CONCRETE STRIP BASE TO BE THICKENED LOCALLY AT FENCE POST LOCATIONS.
ALLOW 600mm MIN BELOW TOP OF BASE LEVEL. AND 600mm SQ

SECTION THROUGH WALL RW–B
AT FENCE POST LOCATION

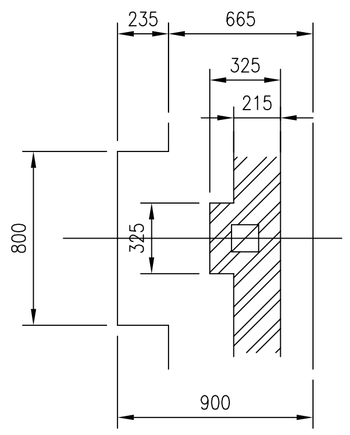

POCKET TO BE FORMED IN WALL AS DETAILED, MIN 125x125 FOR PROPOSED FENCE POSTS. POSTS AT APPROX 1.8m CRS, REFER TO ARCHITECTS DETAILS FOR FENCE TYPE AND DETAILS. POCKET TO BE GROUTED ONCE POST IS INSTALLED AND LEVELED.

VIEW ON POCKET &
WALL THICKENING

CONSTRUCTION ISSUE

A1 DRAWING – DO NOT SCALE.

CONSTRUCTION ISSUE

Date	Revisions	Drawn	Rev.
12/12/22	ADDITIONAL DIMENSIONS ADDED TO RW–B DETAIL GENERIC FLAG ON EDGE DETAIL ADDED	IT	B
18/11/22	ISSUED FOR CONSTRUCTION	IT	A
14/06/22	ISSUED FOR TENDER	IT	P1

Design IT
Structural Solutions
w : www.design–it–solutions.com
e : info@design–it–solutions.com
m : 07794510438

Client
BMBC HOUSING GROWTH

Project
GOLDTHORPE MARKETS
GOLDTHORPE, BARNSLEY

Title
PROPOSED RETAINING WALL DETAILS

Scale	Drawn	Checked	Date
NTS	IT	IT	JUNE 22

Job No.	Drawing No.	Revision
Dit/21/153	EX/01	B