C

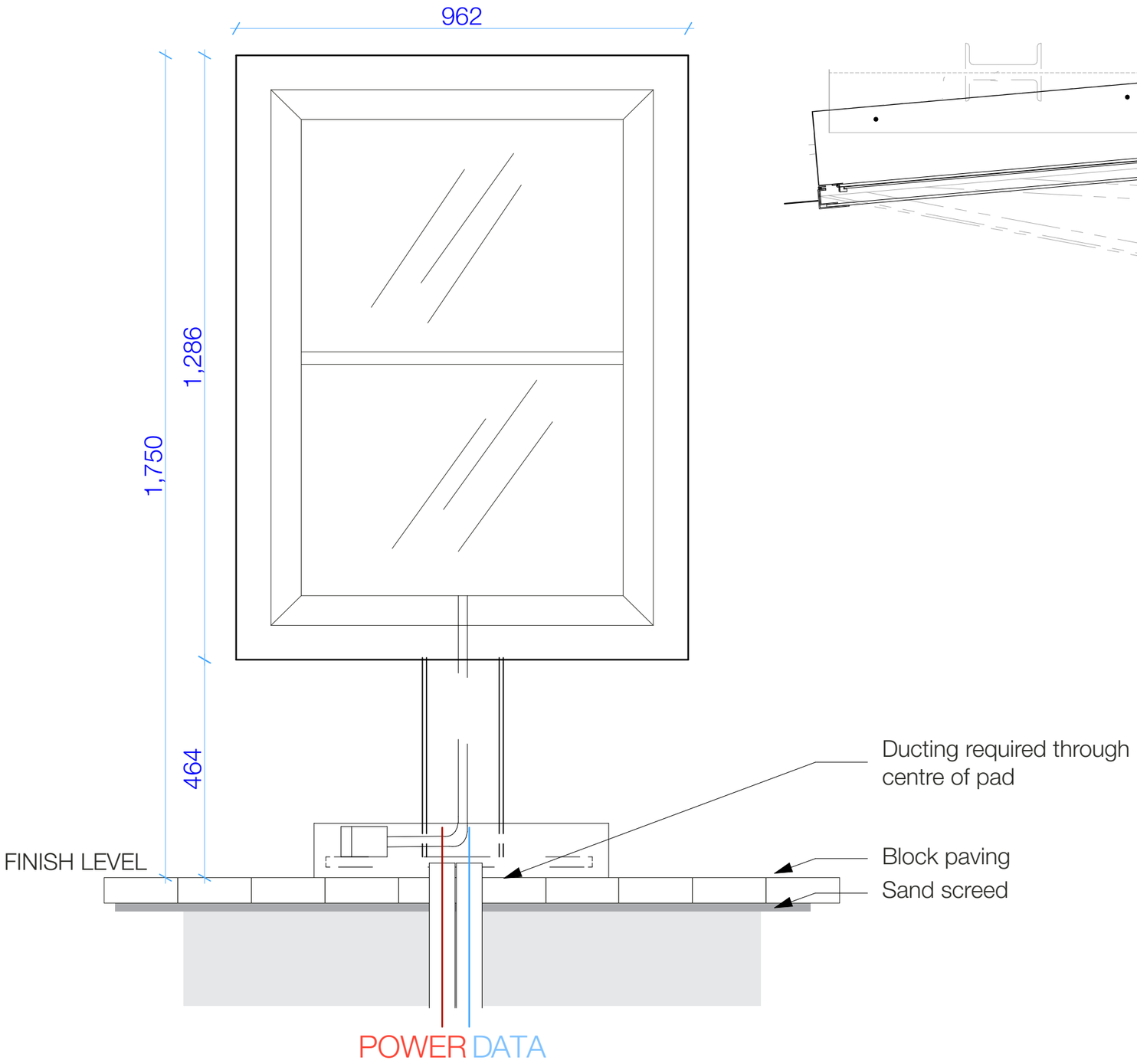

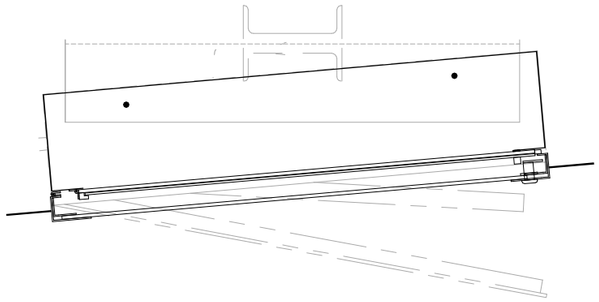

Welded Aluminium
Finish: RAL 7021, Black Grey, 10% sheen
internally illuminated by LEDs

Example Pre Menu Board

architecture design limited
The Fitted Rigging House
Anchor Wharf,
The Historic Dockyard,
Chatham, Kent, ME4 4TZ
+44 (0)1634 791166
www.adesign.ltd
/adesignlimited
registered in England and Wales, No.08419252

This document and its design content is copyright ©. It shall be read in conjunction with all other associated project information including models, specifications, schedules and related consultants documents. Do not scale from documents. All dimensions to be checked on site. Immediately report any discrepancies, errors or omissions on this document to the Originator. If in doubt ASK.

Originator: **Lee Ironmonger**
Checked by: **MAP**
Client: **##**

site address: **as per planning application form**

Starbucks Signage Pack
Drawing no: **##/SBS.C** Status: **Planning**
Date: **08/02/2021** Time: **12:32**
Scale: **1:10@A3**

Preview Menu Board

0.0 0.2 0.4 1:10