© Portakabin Limited 2001
This drawing is the property of Portakabin Limited, it must not be copied or reproduced or divulged to anyone without written permission.

Rev.	Date	By

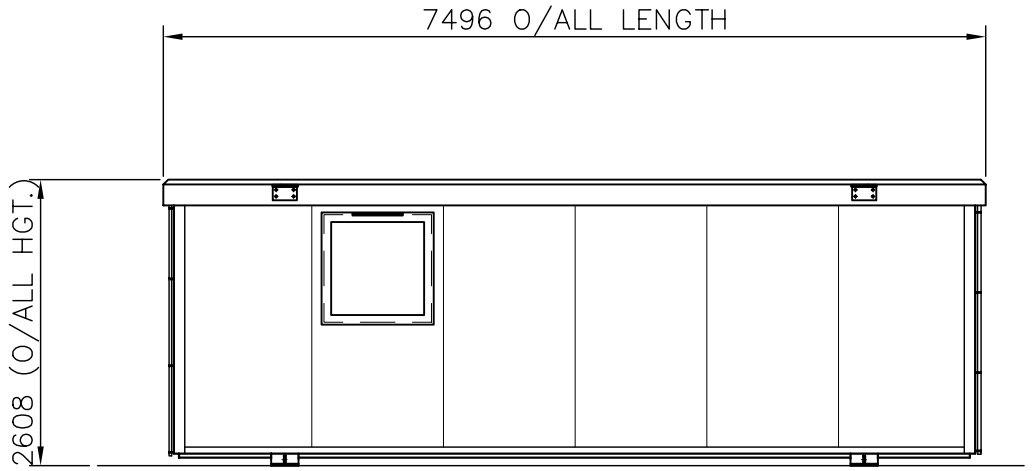

SIDE ELEVATION

END ELEVATION

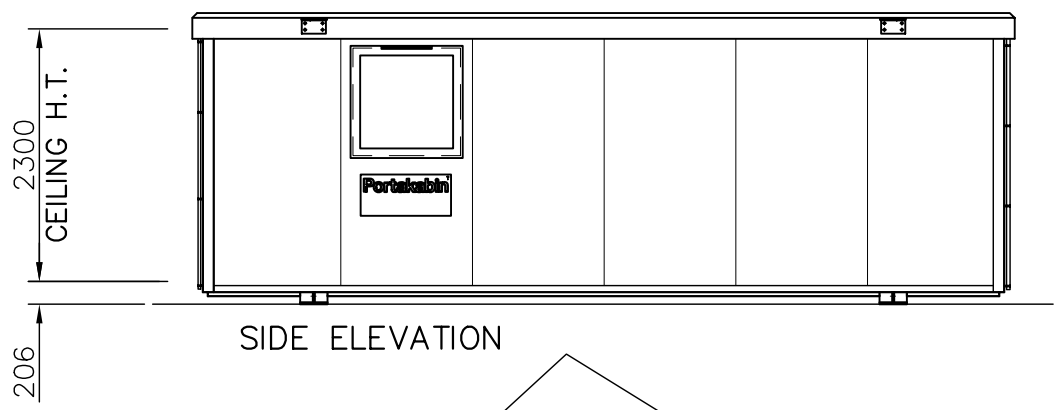

SIDE ELEVATION

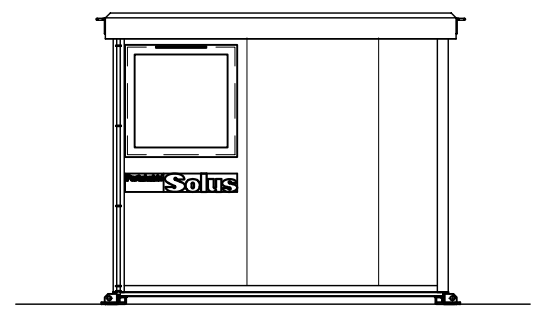

END ELEVATION

PLAN

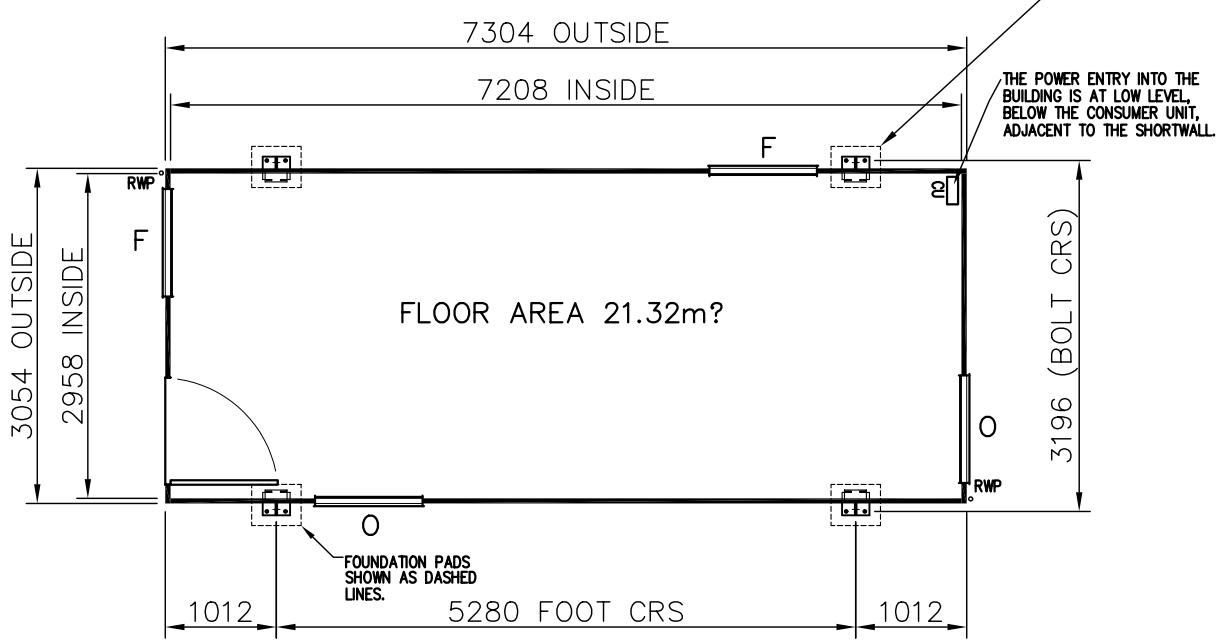

FOOT/LIFTING POINT DETAIL
PLAN VIEW

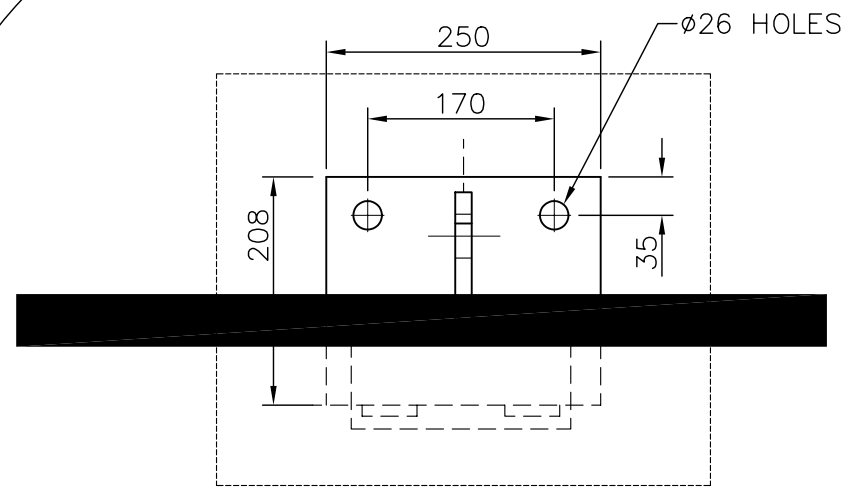

KEY

O	OPEN WINDOW
F	FIXED WINDOW
RWP	RAIN WATER PIPE
CU	CONSUMER UNIT

FOUNDATIONS

Simple foundations or level hard standings are required to be capable of taking the foundation design load at each Lodastrut leg position of 26 kN, which includes the dead weight of the unit, imposed floor load of 3 kN/m?, imposed roof load of 0.75 kN/m? and wind loads based on a basic wind speed of 25 m/s (BS 6399:part 2:1997)
It is recommended that professional advice is obtained for the design.
Foundations shall be constructed with level tops with a tolerance of ± 3mm.
The area of ground under the building, plus a surrounding 500mm, must not be higher than the foundations.
All buildings are to be anchored to the foundations, unless it can be established that no climatic or other forces are likely to be applied so as to exceed the intrinsic stability of the building in its unloaded state. It is recommended that the buildings are secured via the leg base plate using M20 anchor bolts.

STANDARD COLOURS

External :	Walls	– Goosewing Grey nearest BS ref. 10 A 05
	Door	– Powder Coated Aluminium, Blue RAL 5011
	Windows	– Powder Coated Aluminium, Blue RAL 5011
	Roof	– White, nearest BS ref. 00 E 55
	Fascia & Corner Wall Trims	– Goosewing Grey nearest BS ref. 10 A 05
	Bottom Wall Trims	– Goosewing Grey nearest BS ref. 10 A 05
	Feet	– Grey to BS 4800 ref. 10 A 05

Portakabin®

Portakabin Limited Huntington York YO32 9PT
Telephone 01904 611655 Fax 01904 611644

Project PORTAKABIN SOLUS

Client

Title

SL072
SPECIFICATION
DRAWING.

Date	Drawn
16.01.06	E. WATSON

Scale 1:5 & 1:50 @ A2

Drg. No.	Rev.
DQ0638	A