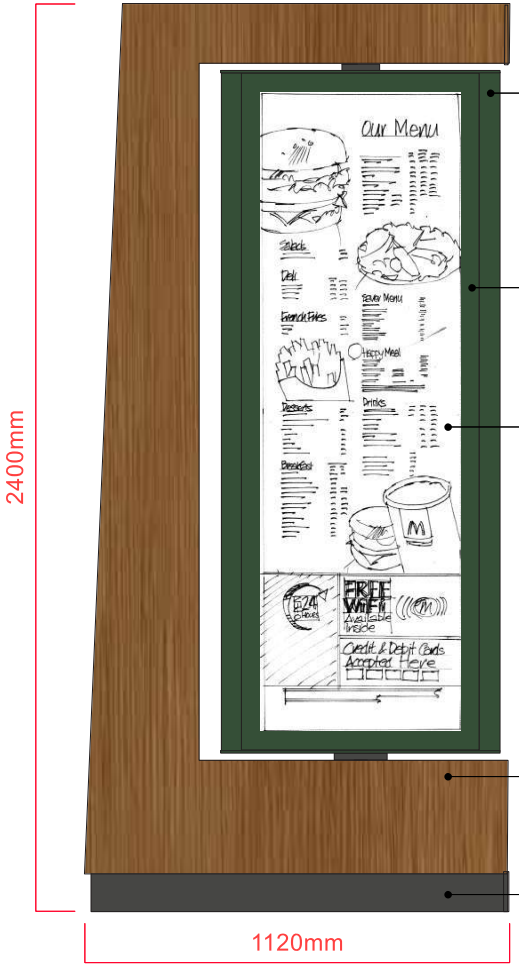


STEEL SHEET
PAINTED
AKZO NOBEL
DULUX 90YY 07/93
DARK GREEN

DOOR IN
POLYCARBONATE

CLIP FRAME
MENU POSTER
INTERNALLY
ILLUMINATED

COMPOSITE
ALUMINIUM
"REYNOBOND" 4MM
REF.: REYNOWOOD

BASE IN STEEL
PAINTED
RAL 7022
DARK GREY

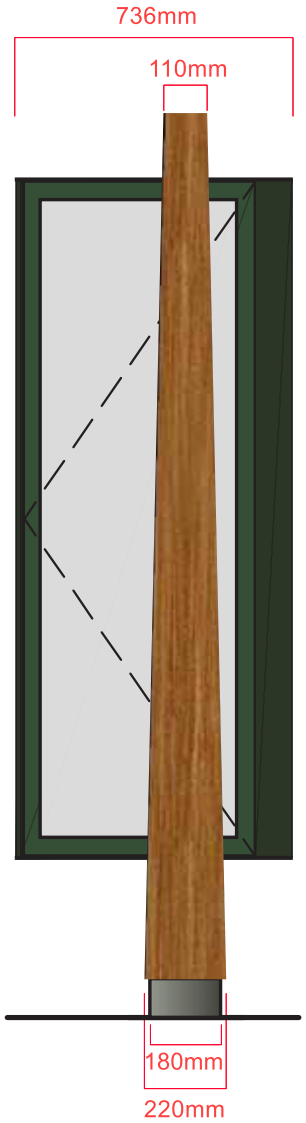

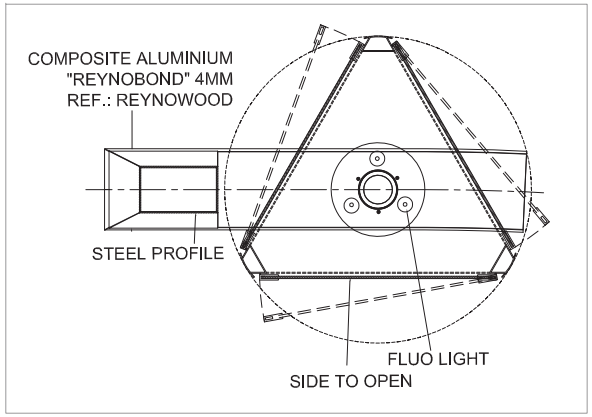
SECTION