PELLETS

BioWIN

Premium Performance

windhager

HEAT WITH VISION

Single Boiler Output Range:
10 to 60 kW

Kaskade Output Range:
10 to 240 kW

4 Heat Your Home with Pellets

6 Convert from Fossil Fuels to Pellets

7 Your Pellet Storage

8 Safe and Dust-Free Pellet Transportation

9 The Right Storage System for Every Home

10 Beneficial Advantages

12 BioWIN Kaskade

14 Customer Testimonials

15 Environmentally Friendly and Efficient

16 Easy Combination with Other Heating Products

17 Pellet Storage Room

18 Technical Data

Heat with Vision

For more than 90 years, we have been keeping families and homes warm throughout Europe. After decades of experience, we are experts in creating environmentally friendly heating solutions. By providing reliable comfort for both today and tomorrow, our heating solutions prove that our knowledge is the foundation of low carbon technologies. Clients receive heating systems tailor made to suit their needs, which will provide reliable warmth in their homes for decades.

We produce our high-quality boilers exclusively in Seekirchen am Wallersee, a small town near Salzburg, Austria. Our innovative products impress not only our customers, but also independent testing institutes, who regularly document our premium quality. All Windhager pellet boilers exceed European standards.

Convenient, Flexible, and Reliable

Heat Your Home with Pellets

The BioWIN provides comfortable warmth for all homes. This innovative pellet boiler is extremely durable and efficient. A guarantee* for up to five years – which even includes the stainless steel burner and ignition element – provides additional security.

The BioWIN contains the proven and innovative Windhager pellet heating technology. Covering an output range of 10 to 60 kW, even larger buildings with heating requirements of up to 240 kW can be heated with the BioWIN. Up to four boilers can be connected in a kaskade for this purpose.

- Convenient
- Durable
- Flexible
- Reliable
- Compact

* Terms and conditions apply

Safe and Efficient

The ignition device is crucial for the trouble-free operation of a pellet boiler, which is why our technicians have developed a unique ignition element that is extremely durable, maintenance-free, and ignites silently. The patented BioWIN ignition device is not a wearing part, and unlike other manufacturers, is included in our extended guarantee*. The combustion technology of the boiler, which has proven itself countless times, provides additional security. Even with fluctuating fuel properties, trouble-free operation is also guaranteed by the reverse sliding ash grate.

* terms and conditions apply

Simple and Convenient

With a self-cleaning burner bowl, a large ash box that requires emptying only one to three times per year, and automatically cleaned heating surfaces, the BioWIN saves you time for other priorities while maintaining peak efficiency.

Flexible

Its compact construction and delivery in separate parts means, the BioWIN can be easily transported. For greater heating requirements, the BioWIN can be positioned in a kaskade format consisting of two, three, or four boilers. With the flexible pellet feed with up to eight probes per boiler, optimal utilisation of the storage room is ensured.

CO_2 EMISSION LIMITS

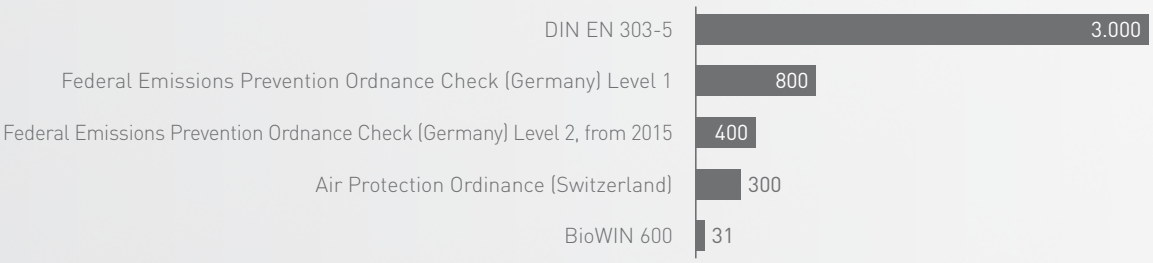

Measurements in mg/Nm³

It Couldn't Be Easier

Convert from Fossil Fuels to Pellets

With BioWIN, it's easy to convert to pellet heating. The existing heating components can still be used, and installing a pellet heating system can be completed quickly and simply.

Tip: Financial incentives for the installation of a Windhager pellet boiler may be available – contact Windhager for more information.

Converting to a Windhager pellet heating system is quick and easy. Structural changes are rarely necessary; existing radiators and even underfloor heating can still be used as before.

Before installing a new heating system, the chimney should be inspected by an expert. If the flue does not meet the requirements for a BioWIN, it can easily be retrofitted with the appropriate system - i.e. a stainless-steel system.

Our past experience shows it is possible to convert from a central heating system fuelled by fossil fuels to a BioWIN in a matter of days.

Tip: Plan your pellet store quickly and easily with the Windhager app

Apple iOS

Android

EXAMPLE SIZE OF A STORAGE ROOM

To heat a well insulated house 130 m² in size, you will need about ...

- **6 kilowatts of heat output**
- **5.5 m³ of storage room (dimensions: 2.5 x 1 x 2.3 m)**
- **3 tonnes of pellets**

Your Pellet Storage

The ideal pellet storage area is dry, contains sufficient room for up to a year's supply of pellets, and is located on an exterior wall.

The trucks that deliver the supply of pellets can blow them into the storage room from a distance of up to 30 metres. Ideally, the pellet storage room will be on an exterior wall, however, it does not need to be directly next to the boiler room. Our innovative, dust-free suction system, rooms or hallways can be bridged. It is important that the storage area stays dry, is fitted with a fire protection door, and has no exposed electrical cables or water pipes.

Individual Solutions for Storing Your Pellets

Safe and Dust-Free Pellet Transportation

To ensure heating is as convenient as possible, we have set new standards in our pellet supply. Our fully automatic suction system transports pellets carefully to your BioWIN.

Whether you have a special room or a hopper for your pellets, we have a suitable suction system that transports pellets in an air current. The storage room does not need to be located directly next to the boiler room, because the hoses allow for transport distances of up to 25 metres. We offer both a triple or eight probe solution, each individually tailored to your pellet storage area.

Eight-probe suction solution:
- **More storage space (30% +)**
- **Saves time and money**
- **Safe and maintenance free**

Unique: Eight-Probe Suction Solution

We are particularly proud of our maintenance-free eight-probe system, which provides the highest levels of comfort. Since the probes can be positioned however you choose, this system fits into every kind of storage room. It is also possible to store pellets in two separate rooms.

	8 PROBES	3 PROBES
Recommended use	• Brick-walled storage room, at least 4 m² • 2 separate stores (zones) • Special storage room configurations: e.g. L-shaped	Rectangular storage room with masonry walls, up to 6 m²
Inclined floor	Not usually necessary	Often a good idea
Safety function	Automatic, "Purge and Change Over"	Automatic, "Purge and Change Over"
Reliable suction distance	Up to 25 m	Up to 25 m
Storage dimensions	Heat load [1] in kW x 0,75 [2] = storage room volume in m³	Heat load [1] in kW x 0,75 [2] = storage room volume in m³

* The heat load refers to the amount of energy required to keep the interior of a building at a constant level of 20 °C on the coldest day of the year.
** Excl. inclined-floor factor of 0.75; incl. inclined-floor factor of 0.9

The Right Storage System for Every Home

Not only are people unique, but houses are too - which is why we have developed many alternative solutions for storing pellets. You are certain to find one that suits you.

Steel-sheet or fabric storage hoppers are possible alternatives to a bricklined pellet storage room for a fuel requirement of up to ten tonnes. They can be installed as a standalone unit in any kind of room, making them perfect for homes with damp basement walls or exposed piping. These units are adapted to support the natural flow conditions of wood pellets.

PELLET STORAGE ROOM

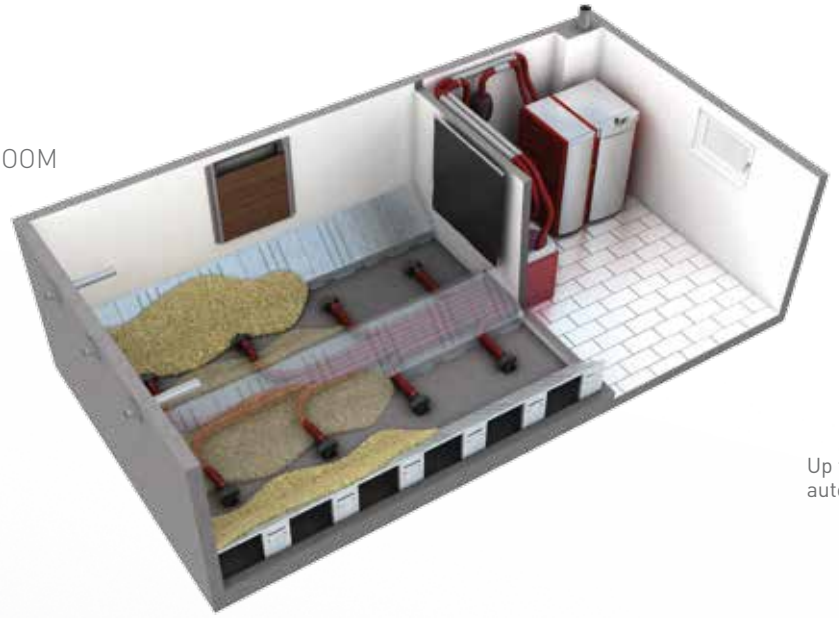

Up to eight probes with automatic changeover unit

BIOTOP

SHEET STEEL HOPPER

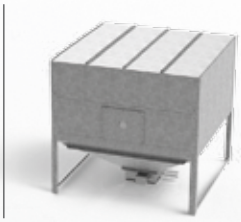

FABRIC HOPPER

BURIED HOPPER

Satisfaction is in the Detail

Beneficial Advantages

You will be satisfied with every detail of your BioWIN. Each component has been carefully designed and uses cutting edge technology. The following features continue to prove the advantages of a BioWIN - top quality with maximum convenience.

- Convenient
- Durable
- Flexible
- Reliable
- Compact

FITS INTO ANY ROOM

Thanks to its compact construction, the BioWIN is simple to install. It requires a footprint of only 1.12 square metres, despite a heat exchanger, 135 kg pellet supply container, and large, integrated ash box.

FLEXIBLE PELLET TRANSPORT

Our fully automatic suction system transports pellets carefully to your BioWIN. The pellet storage area does not need to be located directly next to the boiler room, because our patented suction system easily allows for distances of up to 25 metres.

REMOVE ASH LESS FREQUENTLY

Ashes from three to eight tonnes of pellets are collected inside the large ash box integrated in the boiler. Requiring emptying one to three times a year, no other pellet heating system can offer you such convenience!

STAINLESS STEEL BURNER

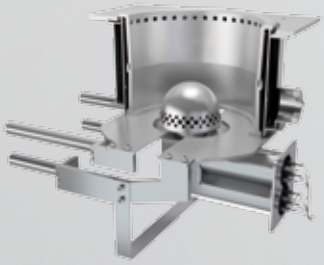

DOUBLE IGNITION ELEMENT

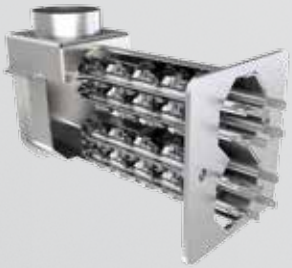

ASH BOX

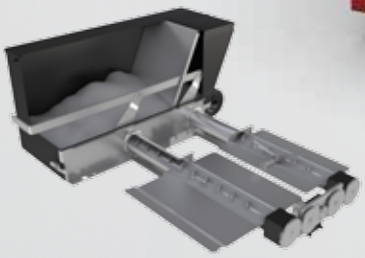

SELF-CLEANING

Innovative cleaning systems ensure that maintenance is kept to a minimum. The heating surfaces are cleaned automatically and a patented, reverse sliding grate ensures a clean burner pot. Since the burner floor opens up, larger pieces of residue left from combustion may be reliably removed as well.

COST EFFICIENT CONSUMPTION

Even in the smallest power range, the stainless steel burner (proven 50,000 times) burns pellets extremely cleanly and efficiently.

WEAR-FREE DOUBLE IGNITION ELEMENT

Our patented ignition element is unique, durable, maintenance free, and silent. Unlike all other pellet boiler manufacturers, it is included in our guarantee*, as it is not considered a wearing part.

* terms and conditions apply

Excellent Output

BioWIN Kaskade

Larger buildings such as multi-dwelling homes or commercial properties can now be heated particularly efficiently and reliably with pellets. The BioWIN can be connected to two, three, and four unit kaskade systems, thus providing for heating requirements ranging from 10 to 240 kW.

- Intelligent
- Flexible
- Reliable

When heating large buildings, it is particularly important to cover the fluctuating heat demand as efficiently as possible. Because of its strong modulation abilities, the BioWIN Kaskade is ideal for meeting these needs.

High Reliability

The BioWIN offers additional reliability when compared to a single large-scale boiler system. If one of the boilers in a kaskade shuts down, the system continues heating with the second boiler. Maintenance work can also be completed without having to turn off the entire system and disrupt heating. For additional security, integration with an existing gas or oil-fired boiler is possible.

Two unit BioWIN Kaskade with a 2 x 8 probe changeover unit connected to two separate pellet storage rooms.

Intelligent Kaskade Regulation

The specially designed Windhager Kaskade control module regulates efficient interaction of all boilers according to heat requirements. By constantly checking how many and which boilers need to operate in order to provide the required amount of heat, balanced system efficiency is ensured. The operator can also decide whether the boilers should automatically start in sequence or at the same time, depending on the heat requirements. Starting all of the pellet boilers at the same time is logical when large quantities of hot water are required, often the case in hotels. Optional external heat sources, such as a fan heater or embed/transfer pumps for controlling swimming pool heating, can also be installed.

Space Efficient and Flexible

The BioWIN Kaskade is easily accommodated even with limited space. The special assembly frame requires a clearance of only 12 cm between the individual boilers. Two, three, and four unit kaskades require only 6.8, 9.6, and 12.4m^2 of space, respectively. Due to our pellet suction system, the BioWIN Kaskade is also extremely flexible in terms of pellet storage. Each boiler can be equipped with either three or eight probes, and transports the pellets from separate storage facilities to the BioWIN.

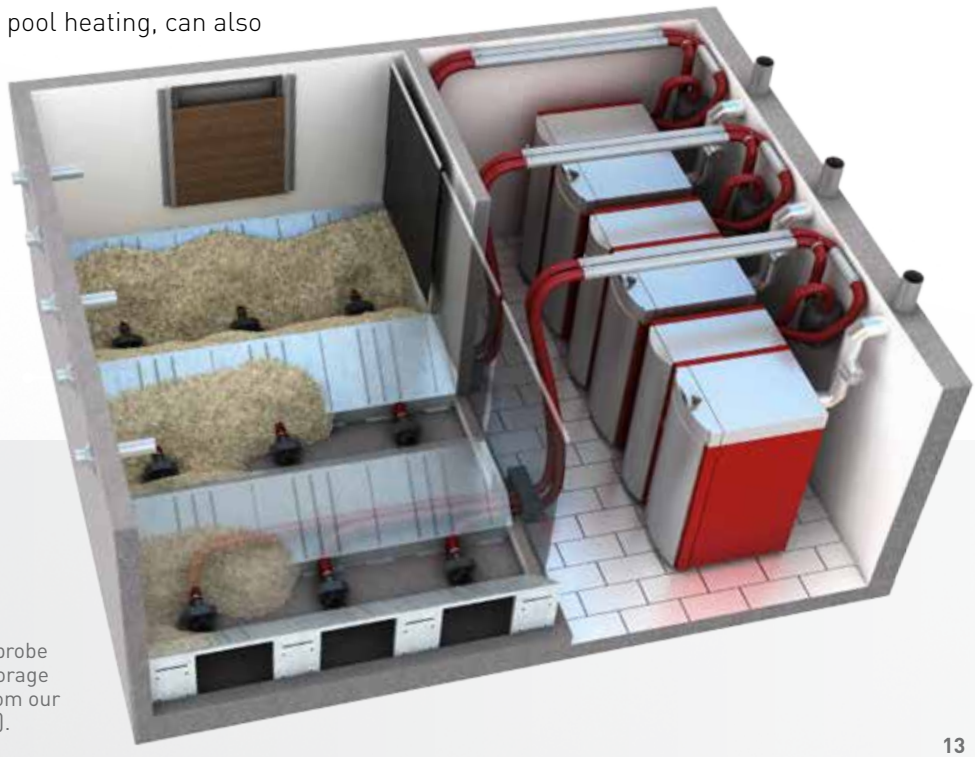

Three unit BioWIN Kaskade with a 3 x 3 probe changeover unit connected to a pellet storage room containing a inclined floor (built from our quick modular sheet-steel inclined floor).

Heat with Vision

Customer Testimonials

The BioWIN provides a reliable, efficient, and flexible operation, to which numerous European families, hotel owners, and property managers can already testify. These satisfied customers reveal why they are especially satisfied with their boiler.

"The heating costs in our multiple apartment building have been cut in half since we replaced the old oil heating system with a BioWIN double-unit kaskade! In addition, we have a solar energy system to support hot water production."
Karl Thaler, Bludenz, Austria

"With the BioWIN, I have exceptional flexibility: It is very compact and fits right in my little boiler room. The eight-probe feed ensures the reliable and fully automatic replenishment of pellets."
Carsten Roloff, Stadtsteinach, Germany

"We are very satisfied with our BioWIN: Thanks to the long cleaning intervals and large ash box, we rarely have to give thought to our heating system. "
Shaun Willis, Newcastle, United Kingdom

Environmentally Friendly and Efficient

Pellets are an environmentally friendly, renewable, and sustainable alternative to expensive fossil fuels.

TOP QUALITY

To enable your heating system to operate efficiently and in an environmentally friendly manner, the fuel quality must be consistant. For this reason, pellets are required to conform to strict international criteria (EN Plus A1).

RELIABLE SUPPLY

Wood is a renewable raw material and readily available. In addition, pellet production capacity in Europe is roughly double that of pellet consumption.

STABLE PRICE

Wood pellets are economic and have enjoyed price stability for many years.

Comfort When Needed

Easy Combination with Other Heating Products

Complicated made simple - the BioWIN can easily be combined with other heating elements.

When it comes to heating, we are a partner on whom you can rely. Everything is available from a single source: besides innovative heating solutions for all fuel types, we also offer components for heating systems. Thanks to Windhager's system technology, you can easily combine all of our different products. Because it is so simple to link the BioWIN to solar thermal systems, underfloor heating, or other types of heating, you save both time and money. Windhager's myComfort control app is especially practical and intelligent, too. Operating your heating system is child's play! No matter whether you're at home on the sofa, on holiday or at work, you can control your heating system remotely and also receive push messages on its status. The management of your heating has never been so simple, innovative and safe!

Controlling your heating system has never been easier with myComfort

Apple iOS

Android

Pellet Storage Room

Example of eight-probe solution

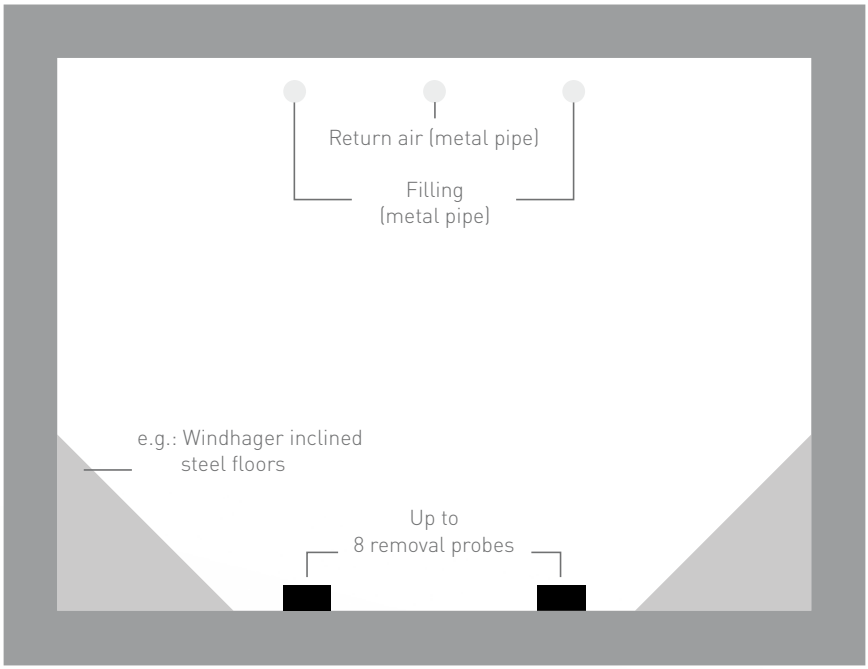

CO_2 EMISSION (DIRECT)

1 kg pellets = CO_2 neutral

1 l of EL heating oil = 2,7 kg CO_2

1 l diesel = 2,6 kg CO_2

1 m³ natural gas = 2 kg CO_2

STORAGE ROOM

650 kg Pellets = 1 m³ storage volume

Storage room dimensions without inclined floors in room: Building heat load in kW x 0.75 = annual storage room requirement in m³

Storage room dimensions including inclined floors in room: Building heat load in kW x 0.9 = annual storage room requirement in m³

ENERGY CONTENT

1 kg pellets = 4,9 kWh

2 kg pellets = 1 l of heating oil = 1 m³ natural gas

3 m³ pellets = 1.000 l of heating oil = 1,000 m³ natural gas

Technical Data

BioWIN

Front view

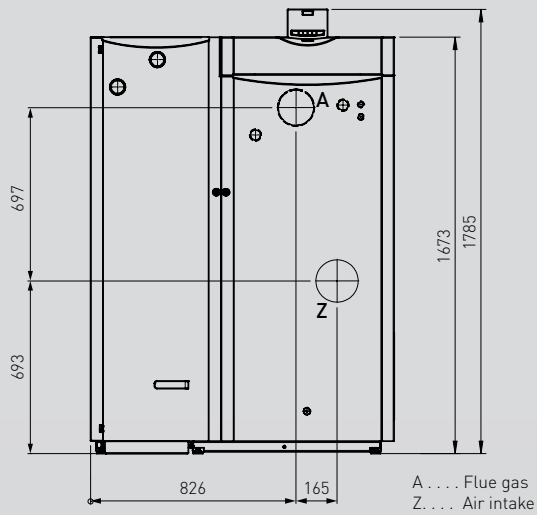

Minimum room height: 1.889 mm
All measurements in mm.

View from above

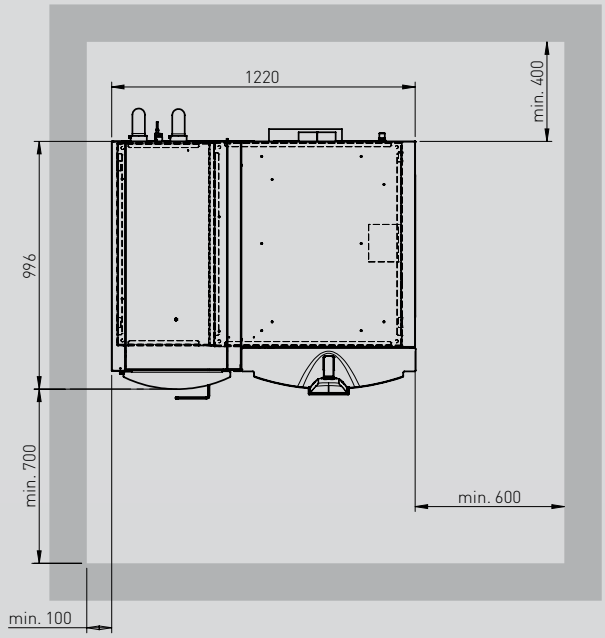

		BioWIN 350	BioWIN 450	BioWIN 600
Rated thermal output range	kW	10 – 35	13,5 – 45	18 – 60
Boiler efficiency at nominal load	%	91,2	90	90,1
Pellet fuel hopper	kg	135	135	135
Boiler weight – completely mounted	kg	700	700	700
Boiler part transport weight	kg	480	480	480
Installation dimensions W x D x H	mm	780 x 980 x 1.800		
Flue gas connection diameter	mm	150	150	150
Power consumption at nominal load	W	103	122	156
Power consumption at part load	W	43	53	63

BioWIN Kaskade

Lateral minimum clearances and space requirements

Standard

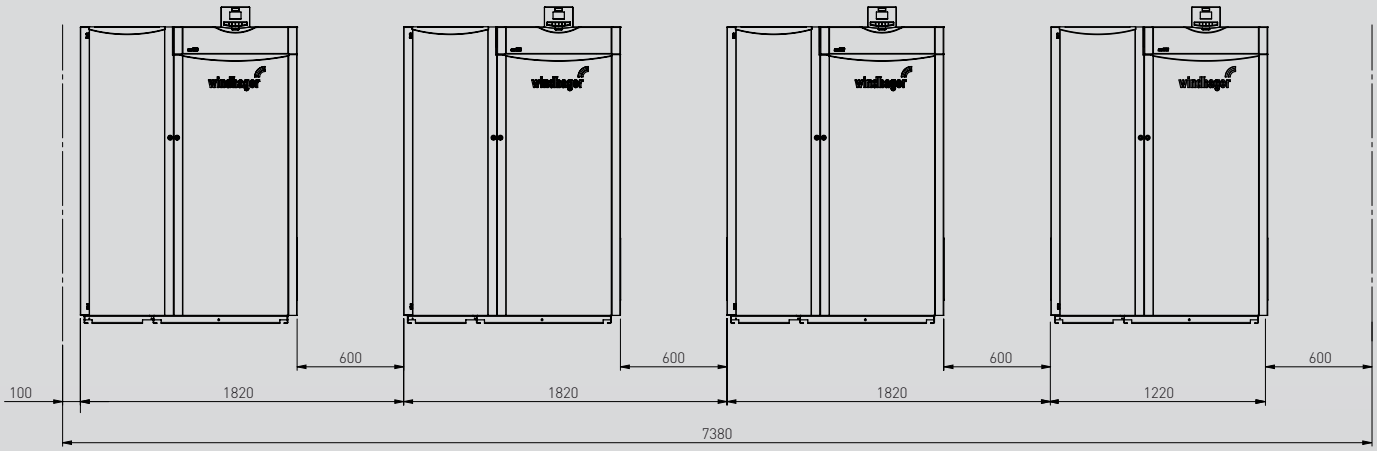

with BIO 120 intermediate frame

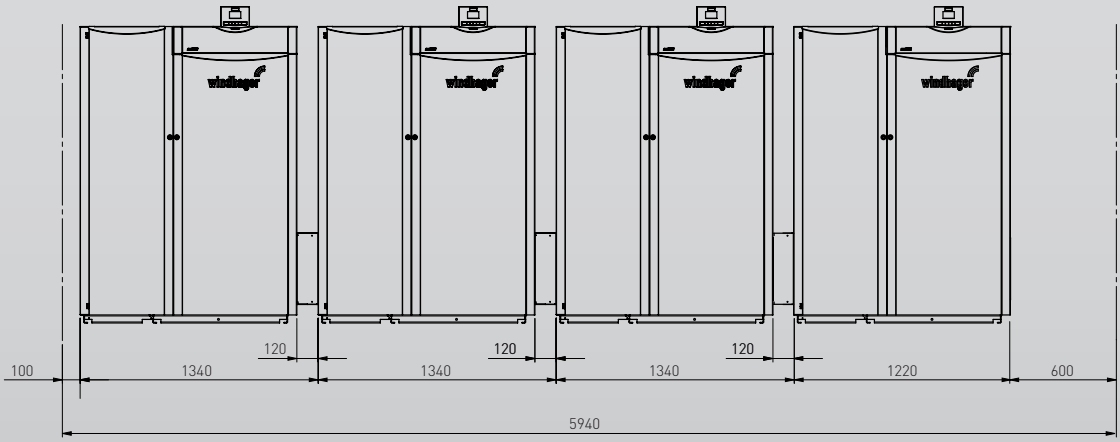

Austria
Windhager Zentralheizung GmbH
Anton-Windhager-Straße 20
A-5201 Seekirchen bei Salzburg
T. +43 (0) 62 12/23 41-0
F. +43 (0) 62 12/42 28
info@at.windhager.com

Germany
Windhager Zentralheizung GmbH
Deutzring 2
D-86405 Meitingen bei Augsburg
T. +49 (0) 82 71/80 56-0
F. +49 (0) 82 71/80 56-30
info@de.windhager.com

Switzerland
Windhager Zentralheizung Schweiz AG
Industriestrasse 13
CH-6203 Sempach-Station
T. +41 (0) 41/469 46 90
F. +41 (0) 41/469 46 99
info@ch.windhager.com

France
Windhager Chauffage Central
France S.A.S.
1, rue du Maire Georges Baruch
Z.A.C. Nord du Rosenmeer
F-67560 Rosheim
T. +33 (0) 3 88 81 82 17
F. +33 (0) 3 88 95 81 85
info@fr.windhager.com

Italy
Windhager Italia S.R.L.
Via Ungheresca sud
I-31010 Mareno di Piave (TV)
T. +39 04 38/49 91 43
F. +39 04 38/49 78 84
info@windhager.it

United Kingdom
Windhager UK Ltd
Tormarton Road
Marshfield
South Gloucestershire, SN14 8SR
T. +44 (0) 12 25/89 22 11
info@windhager.co.uk

windhager.com

Publication details
Media owner, issuer and publisher:
Windhager Zentralheizung GmbH,
Anton-Windhager-Straße 20
5201 Seekirchen am Wallersee, Österreich,
T. +43 (0) 6212/23 41-0, F. +43 (0) 6212/42 28
info@at.windhager.com
Photos: iStockphoto

We reserve the right to modifications
and layout and printing errors.

Your expert PARTNER

windhager
HEAT WITH VISION

01/2015 036228/08, 1. Auflage 2015