Proposed Roof Plan Layout - Scale 1:100

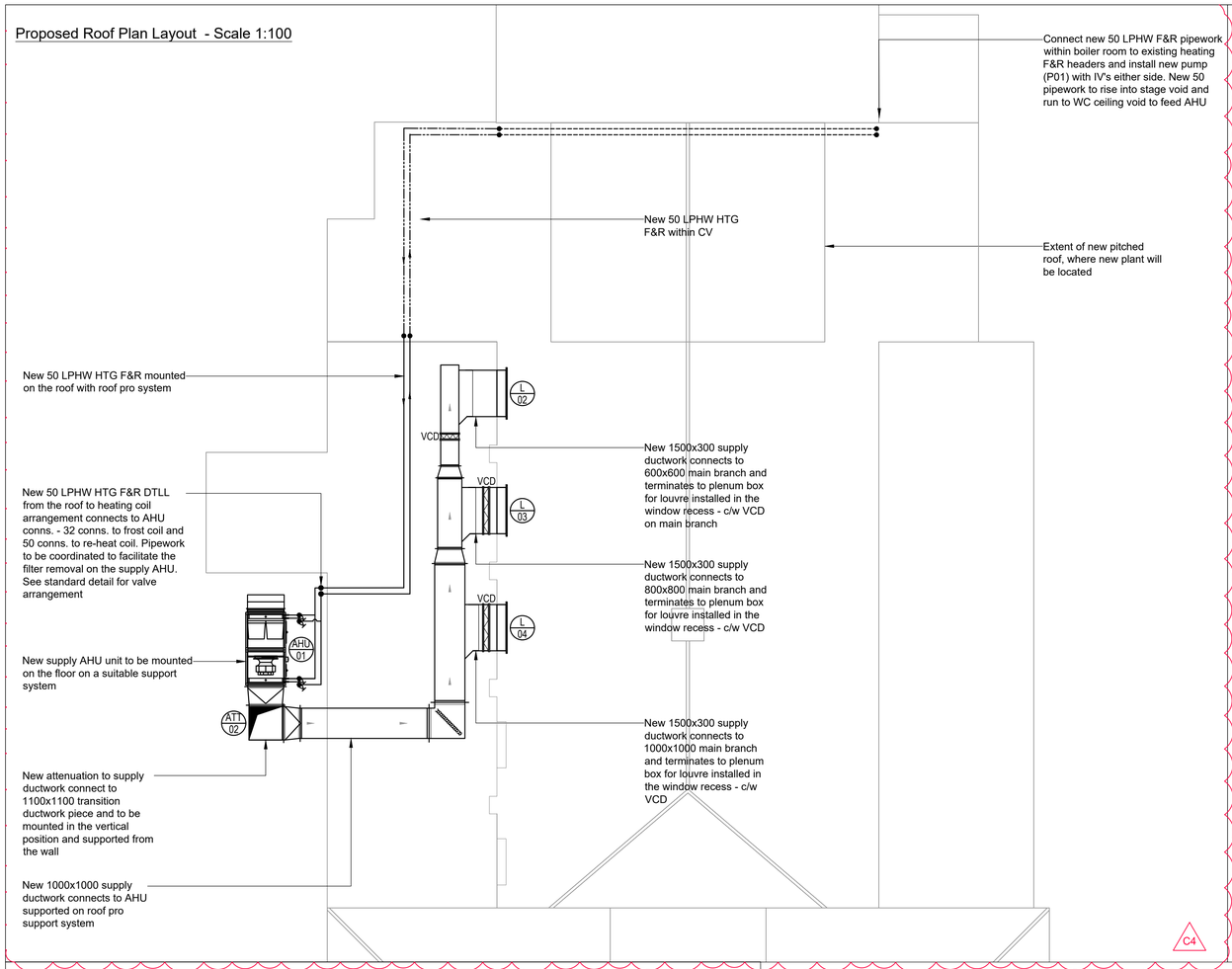

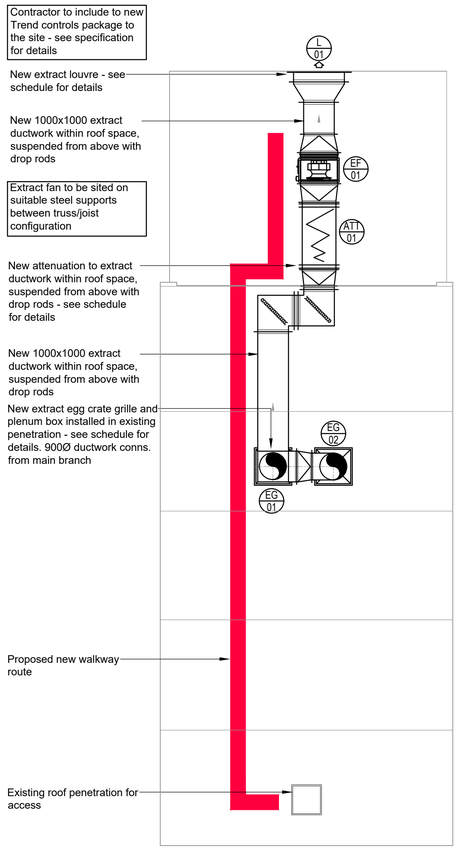

Proposed Roof Space Plan Layout - Scale 1:100

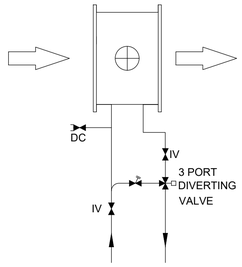

Typical AHU Heating Coil Control Valve Arrangement (N.T.S.)

LEGEND

	Pipework in Floor
	Pipework at Low Level
	Pipework at High Level
	Pipework in Ceiling Void
	Pipework to be Stripped Out
	Dropper/Rise
	Isolating Valve
	Isolating Valve in Dropper/Rise
	Double Check Valve
LL	Low Level
HL	High Level
CV	Ceiling Void
DTLL	Drop to Lower Level
DTB	Drop to Below
RFB	Rise from Below
RTA	Rise to Above
	Ceiling Mounted Extract Fan
	Wall Mounted Extract Fan
	Passive Infra-Red Sensor
FD	Fire Damper
	Supply Grille
	Extract Grille

Notes

This Drawing is an instrument of service and shall remain the property of Align Property Partners Ltd copyright ©. It may not be reproduced or copied in any form. It shall not be used for the construction, enlargement or alteration of a building or area other than the said project without the authorisation of the issuing office.
Contractors shall verify and be responsible for all dimensions and conditions and shall report any discrepancies to the issuing office before proceeding with any work. Drawings shall not be scaled.

NOTES

1. All pipework in ceiling voids, floor ducts and enclosures to be fully insulated in accordance with BS 5422. Insulated pipework shall be fitted with identification labels to BS1710.
2. All fittings, plant and equipment to be installed, regulated and tested in accordance with the manufacturers printed instructions.
3. All valves to be fully accessible and provided with identification labels.
4. Drain valve and air vents to be provided at all low and high points in the system respectively.
5. Press-fit pipework must not be considered for this project.
6. The Contractor shall include in his tender for the supply, installation, testing and commissioning of the proposed hot and cold water services as detailed opposite. The Contractor shall allow for all terminations to the water outlets on the proposed classroom furniture / sanitary ware. The Contractor shall also allow for stripping out and removal of redundant domestic services.
7. All exposed domestic services pipework to be in chrome plated copper tube to BS EN 1057 (old table "x"). all fittings to be non-dezincifiable and comply with BS864. all capillary fittings to have lead free solder rings as Yorkshire potable range.
8. All hot and cold water outlet connections to be fitted with a 'ball-o-fix' type servicing valves.
9. The Contractor shall include within his tender the full chlorination of all new domestic hot and cold water in accordance with BS6700 / BS8558 / BS EN 806.
10. All final connections to WHB/sinks shall be 15mm and hard piped. No flexible connections to be used.
11. The Contractor shall include in his tender for the supply, installation, testing and commissioning of the proposed ventilation services as detailed on this drawing. The drawing shows the tender stage proposals which shall be site checked before fabrication of the ventilation ductwork.
12. All ductwork, fittings and supports shall be to the requirements of DW144 - HVAC Specification for Sheet Metal Ductwork.
13. Flexible ductwork - Low pressure flexible ductwork shall only be used for a maximum of 300mm where connecting to plenum boxes.
14. Manually operated volume control dampers shall be supplied and installed in the locations indicated opposite and shall be of the opposed blade type for rectangular ductwork and butterfly type for circular ductwork. All dampers shall be complete with an approved locking device adjustment positions of open - half - shut on the quadrant.

Damper size shall not be less than the duct size where thermal, insulation occurs the dampers shall have extended shafts and mounting lugs in the quadrant and sheet metal stools to make the control flush with the insulation.

All supply air ventilation ductwork shall be insulated and provided with service Identification labeling to DW144 at sufficient locations to ensure no confusion of services.

AHU/Fan Schedule

Ref	System	Location	Heating Coils	Fans	Comments
AHU01	Playhouse Supply AHU	Playhouse Roof Space	Frost Coil - 36.4kW Reheat Coil - 61.8kW	Supply Air volume - 3m³/s. Ext static pressure - 200Pa. Weight 573kg	c/w Bag Filter Electrical - 3Ph Max Power - 4.1kW Max Current - 6.3A
EF01	Playhouse Extract Fan	Playhouse Roof Space	N/A	Extract Air volume - 3m³/s. Ext static pressure - 200Pa. Weight 221kg	Electrical - 3Ph Max Power - 3.5kW Max Current - 5.3A

The AHU and Extract Fan to be manufactured by Dantherm Ltd or equal and approved.

Extract Grille Schedule

Ref	Location	Type	Duty (m³/s)	Size (LxW) mm	Comments
EG01 - 02	Playhouse	Series GECA-RC	1.5	1000x1000	Grilles to be egg crate type suitable for mounting in the ceiling and c/w top entry plenum box

Extract grilles to be manufactured by Gilberts Blackpool Ltd or equal and approved.
Finish of diffusers to be in a white RAL9010 finish.

Louvre Schedule

Ref	Location	Type	Duty (m³/s)	Size (WxH) mm	Comments
L01	New Roof Gable End	WGF-38	3 @96Pa	1800 x 1200	Weather proof louvre c/w bird guard and rear entry plenum box
L02-04	Side Wall Entry - Below Windows	WGF-38	1 @15Pa	1500 x 500	Weather proof louvre c/w bird guard and rear entry plenum box

Louvres to be manufactured by Gilberts Blackpool Ltd or equal and approved.
Finish of Louvres to be agreed with Architect prior to ordering.

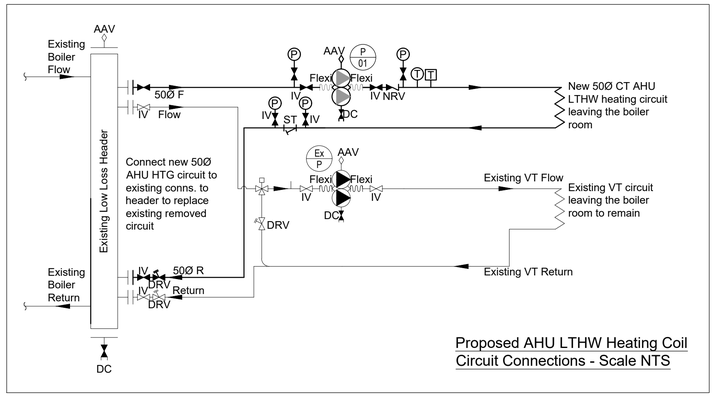

Proposed AHU LTHW Heating Coil Circuit Connections - Scale NTS

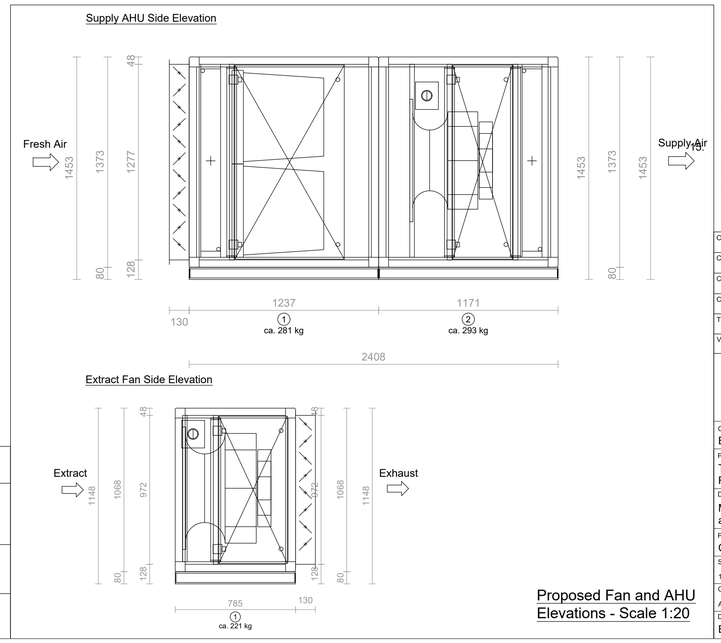

Proposed Fan and AHU Elevations - Scale 1:20

Attenuator Schedule

Ref	System	Location	Model/Type	Flow Rate (m³/s)	Pressure Drop (Pa)	Dimensions L x W X H (mm)	Insertion Loss 63Hz	125Hz	250Hz	500Hz	1Hz	2Hz	4Hz	8 Hz
ATT01	EF01 Extract	Playhouse Roof Space	SPGZ211	3	20	2100 x 1100 x 1100	9	20	32	51	55	55	51	31
ATT02	AHU01 Supply	Playhouse Roof Space	SPGZ211	3	20	2100 x 1100 x 1100	9	20	32	51	55	55	51	31

The attenuators shall be manufactured by Allaway Acoustics Ltd or equal and approved.
The weight of ATT01 is 260kg and the weight of ATT02 is 260kg.

Schedule of New Pumps

Ref	Pump Design Flow Rate (kg/s)	Pump Minimum Resistance (Kpa)	Model	Type	Circuit	Notes
P01	2.12	50	Magna3 D 40-80 F	Twin Head Inverter	Constant Temp AHU Heating Pump	

The new pumps and circulators shall be as manufactured by Grundfos Ltd, or equal and approved. The pump duties and model references shall be as detailed in the Pump Schedule above.

Ver.	Details	Author & Date	Checked & Date	Approv'd & Date
C4	Relocation of AHU to floor	RT	SW	CR
C3	Relocation of AHU to flat roof	RT	SW	CR
C2	Alteration to supply AHU location and termination changes	RT	SW	CR
C1	Contract Issue	RT	SW	CR
T1	Tender Issue	RT	SW	CR

align PROPERTY PARTNERS
Mount View, Standard Way, Northallerton, North Yorkshire, DL6 2YD Tel: 01609 797373

Client: BARNSLEY MB COUNCIL
Project name: The Dearne Playhouse Roof Refurbishment and Extension
Drawing Title: Mechanical Building Services - Proposed Roof and Roof Space Services
Purpose: Contract

Scale	Drawn	Checked	Approved
1:100, 200 & 50	RT	SW	CR
Original Size	Date	Date	Date
A1	Sept 2022	Sept 2022	Sept 2022

Drawing Number: BC2147-APP-XX-XX-DR-M-602
Version: C4