SAN01-P1-001 - SPECIAL 400mm HIGH
Construction Detail

Sign Type P1 - Construction details (special 400mm high)

Scale 1:10 @ A3

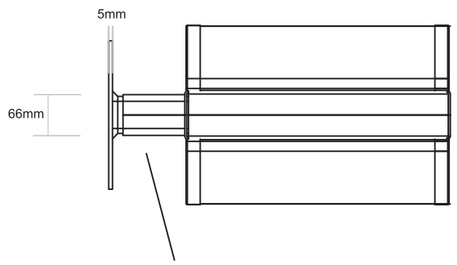

Please ensure the black shroud is suitably stiffened to ensure it does not bow out of shape during installation.

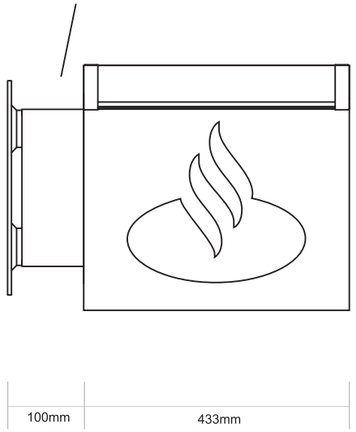

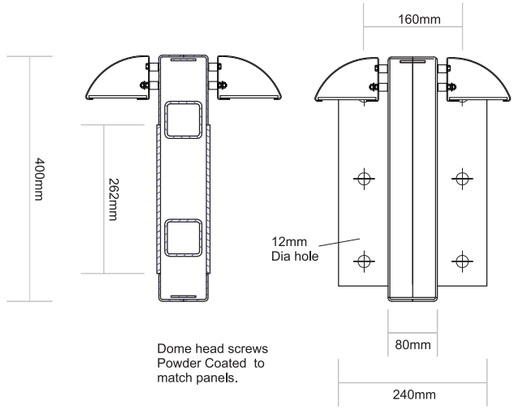

Dome head screws
Powder Coated to
match panels.

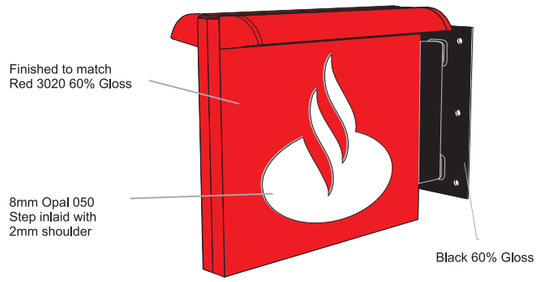

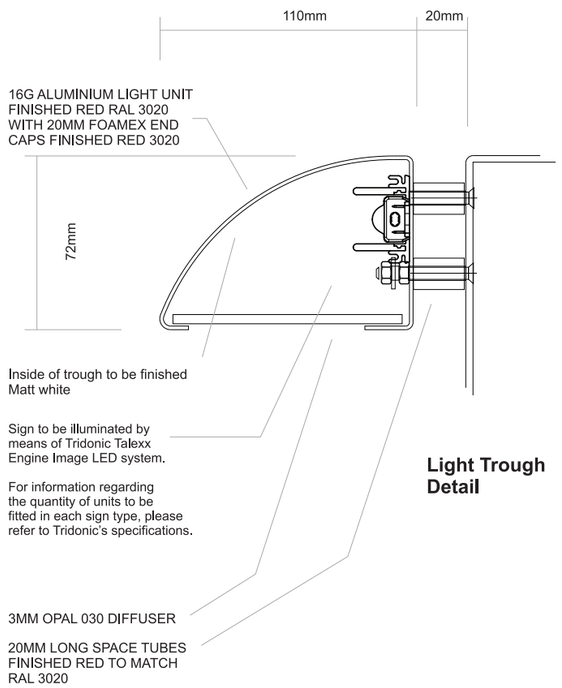

Light Trough Detail

Not to Scale

©Copyright 2009 Insignia Projects Limited. This document is not to be copied, adapted or distributed without prior written consent from Insignia Projects Limited