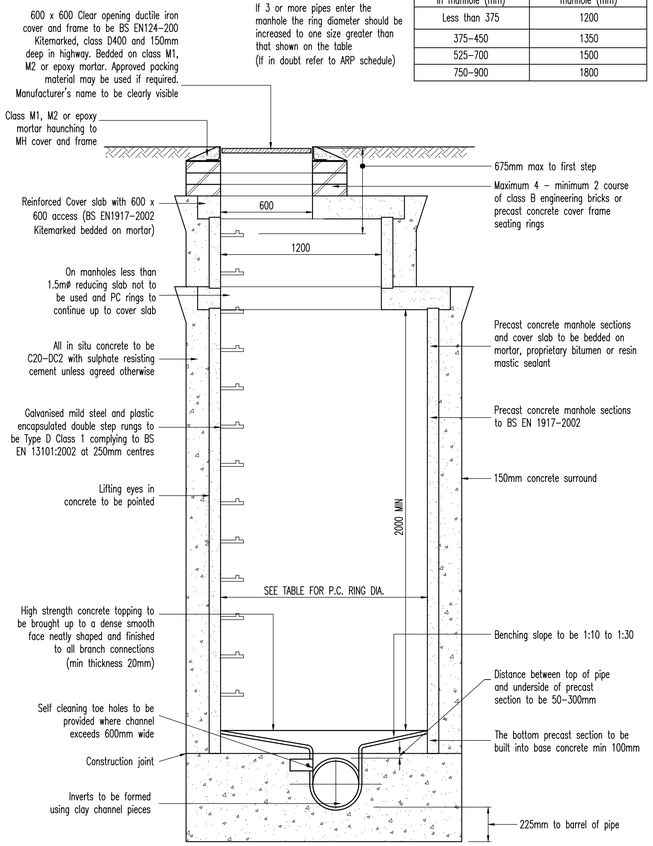

NOTE:
If 3 or more pipes enter the manhole the ring diameter should be increased to one size greater than that shown on the table
(If in doubt refer to ARP schedule)

ø Of largest pipe in manhole (mm)	Minimum internal ø of manhole (mm)
Less than 375	1200
375-450	1350
525-700	1500
750-900	1800

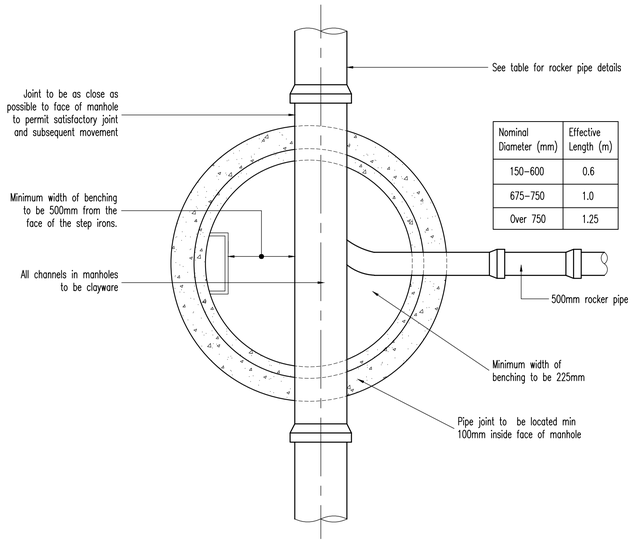

Nominal Diameter (mm)	Effective Length (m)
150-600	0.6
675-750	1.0
Over 750	1.25

TYPICAL MANHOLE DETAIL-TYPE A

SEWERS FOR ADOPTION - 6TH EDITION
Max depth from ground level to soffit of pipe 3.0m to 6.0
The design of the manhole will need to comply with the undertakers safety policy

The manholes cover and frame should be in accordance with Brickhouse "Silent Knight" or similar approved

All custom built ironwork to be Hot Dipped Galvanized prior to fixing

NOTE:
If 3 or more pipes enter the manhole the ring diameter should be increased to one size greater than that shown on the table
(If in doubt refer to ARP schedule)

ø Of largest pipe in manhole (mm)	Minimum internal ø of manhole (mm)
Less than 375	1200
375-450	1350
525-700	1500
750-900	1800

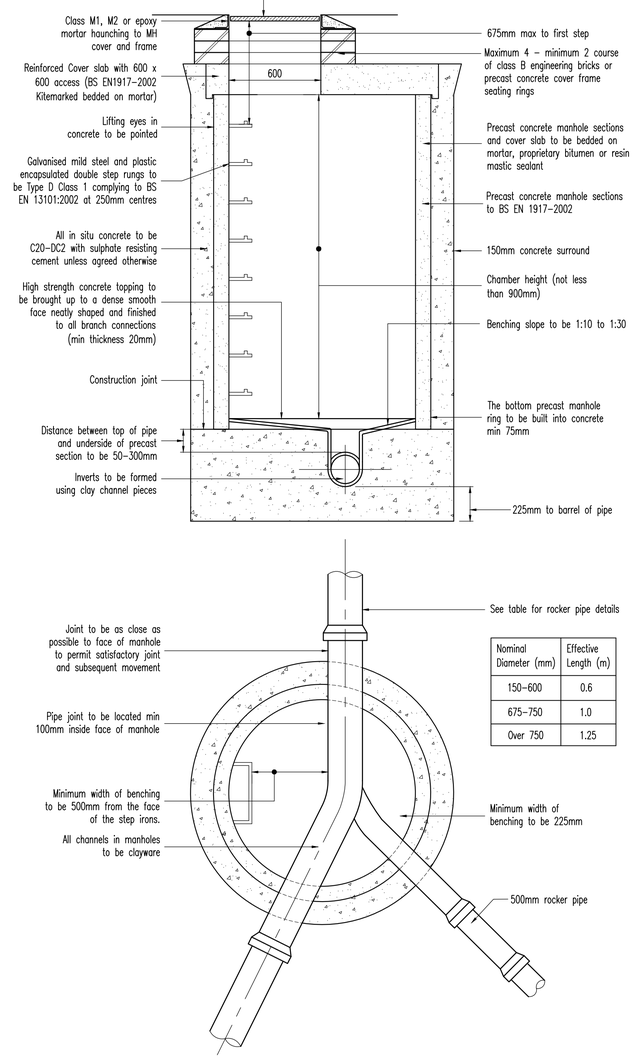

Nominal Diameter (mm)	Effective Length (m)
150-600	0.6
675-750	1.0
Over 750	1.25

TYPICAL MANHOLE DETAIL-TYPE B

SEWERS FOR ADOPTION - 6TH EDITION
Max depth from ground level to soffit of pipe 1.5m-3.0m
The design of the manhole will need to comply with the undertakers safety policy

NOTE:
When chamber size increases to 1500mm or larger a 1200 x 675 opening (central or eccentric) sited over the channel with twin 600 x 600 cover should be provided

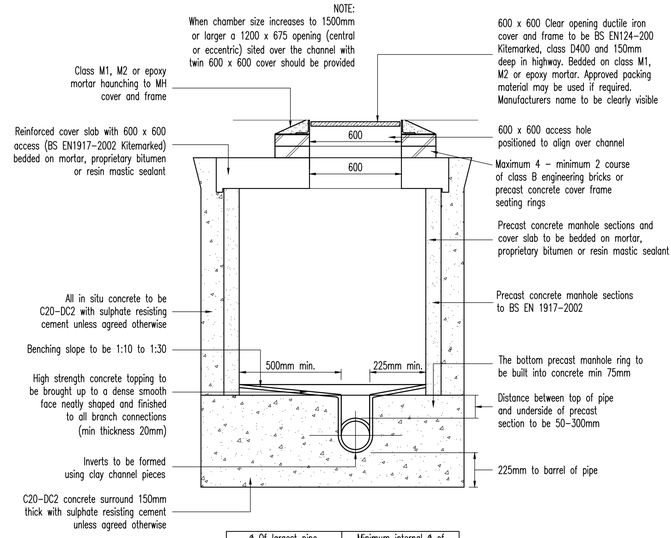

ø Of largest pipe in manhole (mm)	Minimum internal ø of manhole (mm)
Less than 375	1200
375-700	1500
750-900	1800

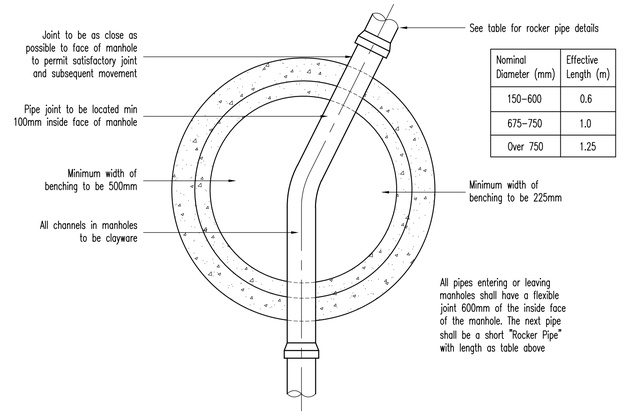

Nominal Diameter (mm)	Effective Length (m)
150-600	0.6
675-750	1.0
Over 750	1.25

TYPICAL MANHOLE DETAIL-TYPE B1 SHALLOW MANHOLE

SEWERS FOR ADOPTION - 6TH EDITION
Max depth from ground level to soffit of pipe 1.0m TO 1.5m
The design of the manhole will need to comply with the undertakers safety policy

SUBJECT TO THE APPROVAL OF ALL RELEVANT AUTHORITIES

N O T E S

General Notes

1. All adoptable sewer/highway drainage works and material to be in accordance with "Sewers for Adoption 6th Edition The relevant British/European and Yorkshire Water's Standard/Addendum and Kitemarked".
2. Manhole covers shall/must have a clear opening of 600mm and shall be Class D400 BS EN 124 with 150mm deep frames in highway.
3. Filled ground must be filled and consolidated under the supervision and to the satisfaction of Yorkshire Water (for adoptable S104 sewers) and LCC (for highway drainage) before any drainage works are carried out.
4. Cover slabs must carry the BSI Kitemark or will be rejected by the Authorities inspector. Where the clear opening of the Kitemarked product is different to that of the cover and frame, a loading bearing slab should be fitted above the cover slab to bring the size down to 600x600mm for the Authorities specified cover size.
5. The adoptable sewers/highway drains should be a minimum of 1m and manholes 0.5m from kerb faces and service margins.
6. Sewers/highway drainage must have 5 metres clearance from trees and hedges, (Also refer to Figure 2.3 on page 33 in "Sewers for Adoption" 6th Edition for restrictions on tree planting adjacent to Sewers).
7. Sewers/highway drainage to be laid in Class "S" bedding (150mm granular bed and surround). Where depth of cover to top of the sewer is less than 1.2m in highways and verges (or less than 900mm in none vehicular access areas) then a concrete slab should be provided above the granular bed and surround".
8. Adoptable sewer/highway drainage pipes to be laid in maximum 3 metre lengths unless there is a specific operational need to lay longer.
9. Plastic channel sections in manholes are not acceptable and clayware is preferable. Plastic channels are difficult to set in concrete and a satisfactory finish cannot be obtained on the benching.
10. The chamber size of manholes with more than one connection in them may need to be increased an increment to accommodate the connections and bends.
11. Yorkshire Water policy is not to accept Type "C" brick manholes for proposed adopted sewers. Instead Type "B" manholes with 1200mm dia or 1500mm dia. rings, with the opening sited over the channel where depth of cover to pipe soffit is 1-1.5m shall be used.
12. Surface water and foul rising mains to be provided with marker tape above the rising mains.
13. If plastic pipes are to be used then the following should apply:-
    a. All adoptable sewers to be BSI Kitemark (certified to WIS 4-35-01).
    b. Bedding and backfill material to conform to the requirements of Water industry Specification 4-08-02 (Table A2)
14. Where plastic pipes are proposed for adoptable sewers/highway drainage, structural calculations for the plastic pipes and a site investigation report to prove that the ground condition is suitable for the plastic pipes are to be produced.
15. Where plastic pipes are installed into the ground prior to getting full technical approval, the developer must provide a CCTV survey of the prospectively adoptable sewers/highway drainage and a deformation test (Light-Line test) of the plastic pipes.
16. Demarcation chambers to be a min. 450mmø chamber for 100mmø foul & 150mmø surface water pipes up to 1.2m deep. For depths greater than 1.2m, restricted access opening to 350mm is required for safety reasons.
17. Maximum depth of demarcation chamber to be 2m, where depth exceeds 2m, manhole to be constructed as type B manhole.
18. Yorkshire Water is not obliged to accept filter drain/land drainage runoff into the public sewer network or adoptable drainage system (directly or in-directly). An alternative method of disposal of the land drainage runoff will therefore be required and liason with the Land Drainage Authority with regard to the disposal of the filter drain/land drainage runoff is required.
19. Sulphate resistant cement (C20-DC2) and precast concrete products must be used or a laboratory report provided that such precautions are not necessary.
20. Strength of vitrified clay pipes (if used) to be 40KN/m for 100ø, 40KN/m for 150ø, 45KN/m for 225ø and 72KN/m for 300ø. All concrete pipes to be Class 120 concrete to EN 1916/BS 5911-1:2002.
21. Where a B125 cover and frame has been approved, this must not be coated in plastic and must have lifting eyes suitably sized to accommodate standard lifting keys. Screw down covers are not acceptable

Rev	By	Date	Revision	Chk	Apvd
/	RF	14.7.20	Issued for approval	MI	MI

ARP ASSOCIATES
Chartered Consulting Engineers
Northwest House ● 5 & 6 Northwest Business Park ● Servia Hill, Leeds ● LS6 2QH
☎ 0113 245 8498 🖷 0113 244 3864 ✉ leeds@arpassociates.co.uk 🌐 www.arpassociates.co.uk
ARP Associates is a trading division of ARP Geotechnical Ltd, a company registered in England and Wales with company number 3771811, whose registered office is at 5/6 Northwest Business Park, Servia Hill, Leeds LS6 2QH

TITLE
TYPICAL MANHOLE DETAILS
SHEET 1 OF 2

PROJECT
HOUGH LANE
WOMBWELL

CLIENT
HOOBER HOMES

DRAWING STATUS
PRELIMINARY

Scale	Date	Drawn	Chk.
As shown @ A1	JUL 20	RF	MI

Drg. No. 2110/01/07.01
Rev /