TREE PROTECTION MEASURES
PROPOSED EXTENSION WORKS

5 WILLOW BANK, BARNSLEY, S75-1BN

NYP REF. 104-102-TP01

SEPTEMBER 2023

]TREE ROOT PROTECTION AREAS

Sequencing: Before the commencement of any works on site (other than those set out in the schedule of tree works contained in this document), protective fencing shall be erected in the positions shown on drawing 104-102-T01.
Once the fencing is in place it shall be inspected and signed off by the site agent.

The Tree Protection Plan 104-102-T01 shows the alignment of **Tree Protection Fencing** (**TPF**). This fencing comprises a single type as TPF 3 as attached detail.

All TPF shall be installed prior to any of the following taking place:

- **Plant and materials delivery**
- **Demolition**
- **Soil stripping**
- **Construction works**
- **Utility installation**
- **Landscaping**

Hereafter, the above listed operations are collectively referred to as **'development'**. Once installed, permanent TPF Types 1 shall not be taken down or relocated at any time.

TREE PROTECTION FENCING

Type 1 Tree Protection Fencing (TPF1) as attached detail, which is suitable for areas of high intensity development, shall comprise interlocked Heras panels, well-braced to resist impacts by attachment to a scaffold framework that has been set firmly driven into the ground and braced as appropriate. The scaffold framework shall comprise top and bottom horizontal bars with uprights set into the ground at no less interval than one per panel. Sloping bars as braces, perpendicular to the line of the fence, shall be fixed to the top rail and set into the ground; these shall be spaced at no less an interval than one brace per two panels. Where conditions prevent post being driven the TPF will be a solid style hording supported on concrete posts cast into the ground; the holes will be lined with an impermeable / plastic layer to prevent leachate.

- **Type 3 Tree Protection Fencing (TPF3),** which is only suitable for areas of low-intensity development, shall comprise 1.2m high cleft chestnut paling, securely mounted onto firmly driven wooden posts.

All fencing shall be maintained in good, robust and effective condition until all development has been completed, and shall then only be removed once all plant, materials and site compounds have been removed, i.e. when the site is ready for hand-over to the end user.

All fencing shall be wired together to prevent dismantling or aid easy access. The fencing shall remain in place until completion of the main construction phase.

Signage: To inform site personnel of the purpose of the fencing, information notices shall be fixed to the fencing at approximately 5m intervals on all TPF. These notices shall be of all- weather construction and shall be in the form of the specimen attached for copying

PROHIBITIONS ADJACENT TO TREES

General: No works including storage or dumping of materials shall take place within the exclusion zones defined by the protective fencing.

In addition to the above, further precautions are necessary adjacent to trees:

- A 10m separation distance shall be observed between any tree and substances injurious to tree health, including fuels, oil, bitumen, cement (including cement washings), builders' sand, concrete mixing and other chemicals.

AVOIDING DAMAGE TO STEMS AND BRANCHES

General: Care shall be taken when planning site operations in proximity to trees to ensure that wide or tall loads or plant with booms, jibs and counterweights can operate without coming into contact with retained trees. Such contact can result in serious injury to them and might make their safe retention impossible.

Consequently, any transit or traverse of plant in proximity to trees shall be conducted under the supervision of a banksman; to ensure that adequate clearance from trees is at all times maintained. In some circumstances, it may be impossible to achieve this, necessitating tree pruning. This is known as ‘access facilitation pruning’.

SUPERVISION AND MONITORING

The site agent shall inspect the protective fencing daily.

Reporting damage to trees and tree protection fencing. Shall any damage occur to trees this shall be reported to the site agent immediately.

The site agent shall report up the chain of responsibility to the client, to allow any remedial measures to be implemented as necessary.

If fences become damaged so as to impair their function in protecting trees, all work shall cease in the vicinity of the damage until the fence has been returned to standard.

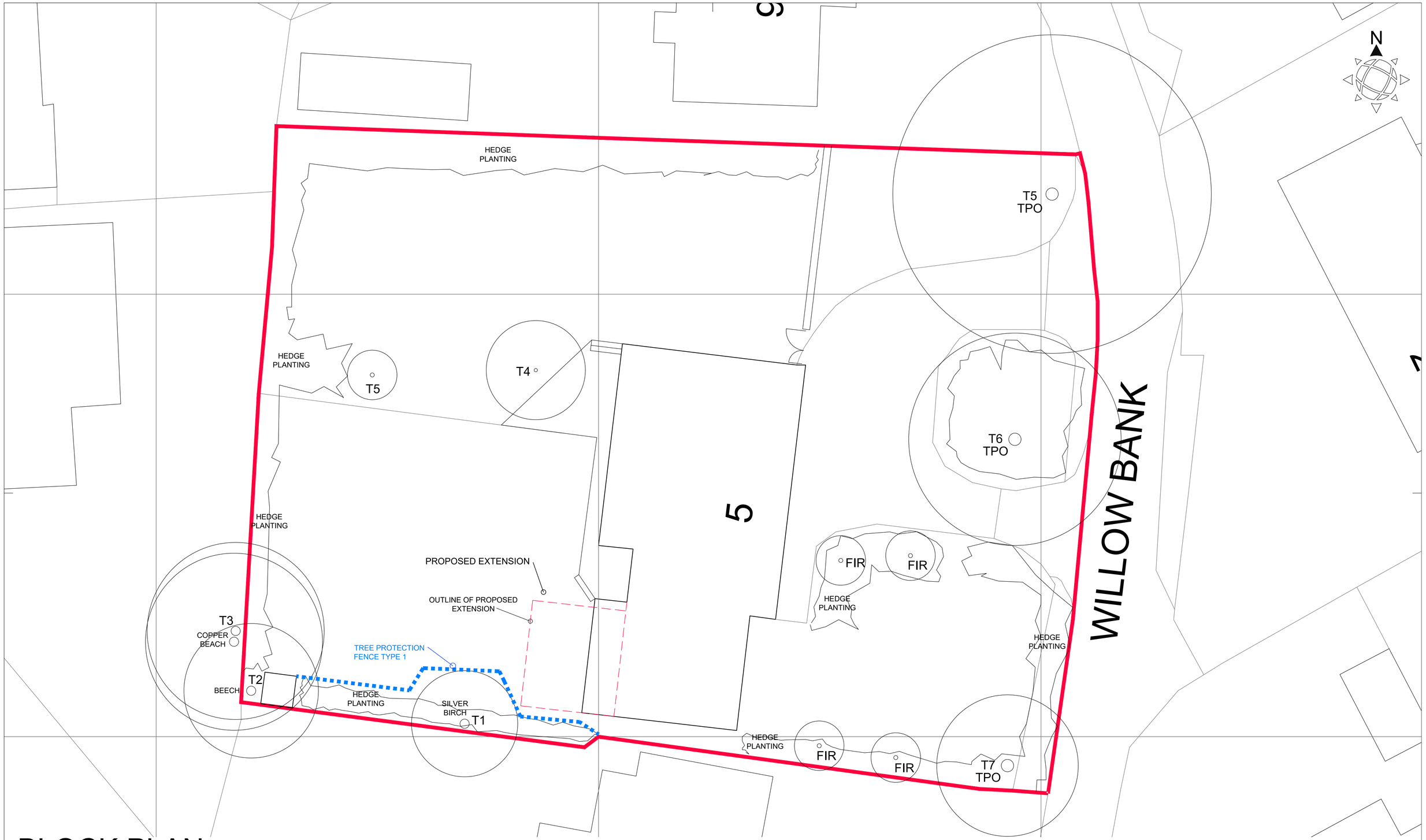

BLOCK PLAN SCALE 1:200

NYP

Chartered Institute of Architectural Technologists
Registered Practice

1. THIS DRAWING AND THE COPYRIGHTS AND PATENTS THEREIN ARE THE PROPERTY OF NYP ARCHITECTURAL SERVICES LLP REGISTERED IN ENGLAND AND WALES No. 4631338 AND MAY BE USED OR REPRODUCED ONLY UNDER CONTRACT.

2. CONTRACTORS AND SUB-CONTRACTORS MUST CHECK AND AGREE ALL DIMENSIONS BEFORE PREPARING SHOP DRAWINGS OR COMMENCING WORK ON SITE

3. CONTRACTORS ARE RESPONSIBLE FOR INFORMING THE DESIGNER OF ANY DISCREPANCY DISCOVERED ON THIS DRAWING OR BETWEEN THIS DRAWING AND ANY OTHER RELATED DOCUMENT ISSUED UNDER THE STANDARD FORM OF CONTRACT IN RESPECT OF THE WORK.

4. WRITTEN DIMENSIONS ONLY ARE TO BE USED FROM THIS DRAWING. IF IN ANY DOUBT ASK FOR CLARIFICATION.

Notes.

Revisions.

Date	Suffix	Description	Date	Suffix	Description

NYP ARCHITECTURAL SERVICES
The Grove, High Street, Dodworth, Barnsley, S75 3RQ. Tel: 01226 200989. E-mail : scott@nypas.co.uk / stephen@nypas.co.uk

Project. 5 WILLOW BANK BARNSLEY , S75-1BN		Client. MR SCOTT KEEN	
Drawing Title. TREE PROTECTION PLAN		Date. SEPT 2023	Scale. AS INDICATED
		Ref. 104-102	Dwg. No. TP01
			Rev.

SHEET SIZE A1

Tree Protection Signage







TREE PROTECTION FENCING TPF 1

9.2 Barriers

9.2.1 *Barriers should be fit for the purpose of excluding construction activity and appropriate to the degree and proximity of work taking place around the retained tree(s). On all sites, special attention should be paid to ensuring that barriers remain rigid and complete.*

9.2.2 *In most cases, barriers should consist of a scaffold framework in accordance with Figure 2 comprising a vertical and horizontal framework, well braced to resist impacts, with vertical tubes spaced at a maximum interval of 3 m. Onto this, weldmesh panels should be securely fixed with wire or scaffold clamps. Weldmesh panels on rubber or concrete feet are not resistant to impact and should not be used.*

NOTE the above is preferred because it is readily available, resistant to impact, can be re-used and enables inspection of the protected area.

9.2.3 *It may be appropriate on some sites to use temporary site office buildings as components of the tree protection barriers.*

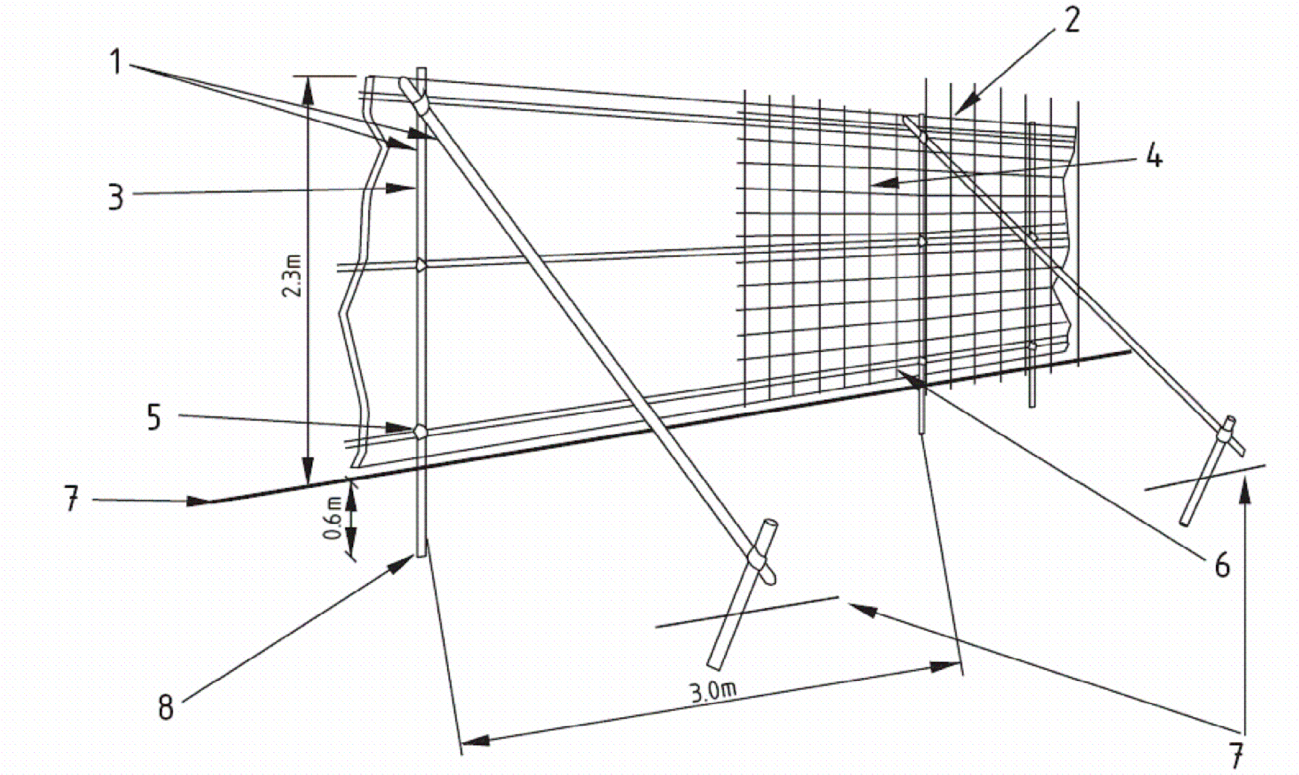

1 Standard scaffold poles

2 Uprights to be driven into the ground

3 Panels secured to uprights with wire ties and where necessary standard scaffold clamps

4 Weldmesh wired to the uprights and horizontals

5 Standard clamps

6 Wire twisted and secured on inside face of fencing to avoid easy dismantling

7 Ground level

8 Approx. 0.6 m driven into the ground

Figure 2 — Protective barrier

TREE PROTECTION FENCING TPF 3

TPF 3 - in low importance areas a reduced level of fencing can be used to control access, an example is shown below.

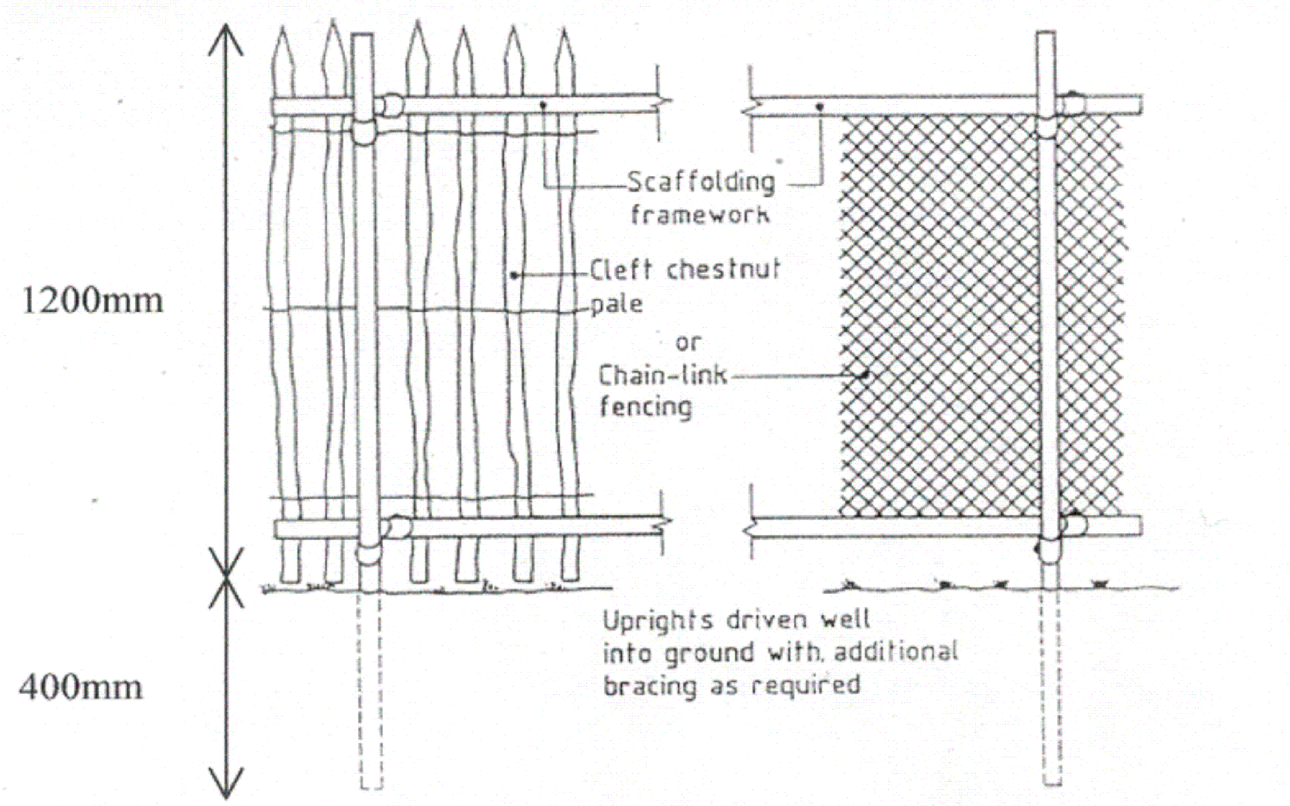

The fencing should be at least 1.2 metres in height, comprising a vertical and horizontal framework of scaffolding, well braced to resist impact, supporting Cleft Chestnut or Chain Link netting or similar as shown above. The fence should display warning signs with the wording “Root Protection Area – Strictly No Entry” a suggested sign is included below. Refer to tree schedule minimum distance of protective fencing