A1 | SCALE 1:1 | mm

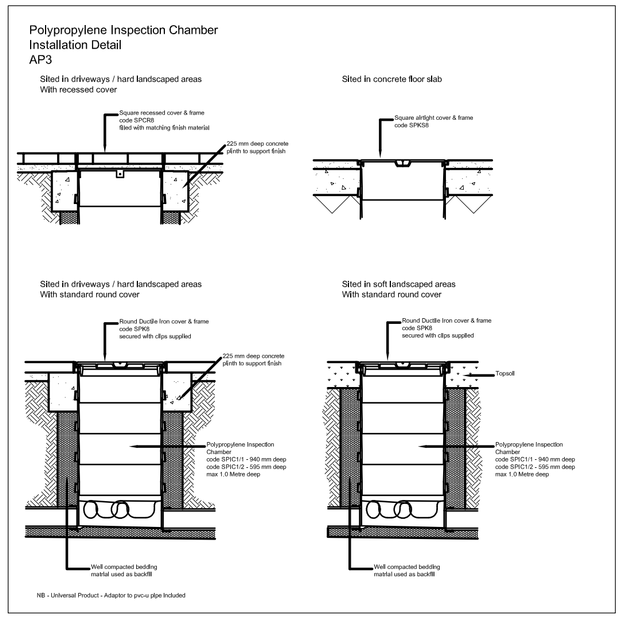

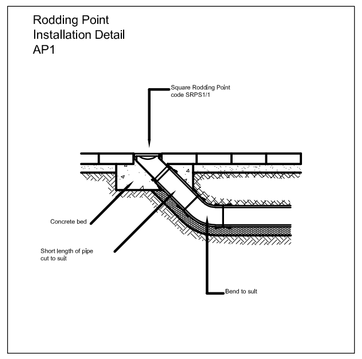

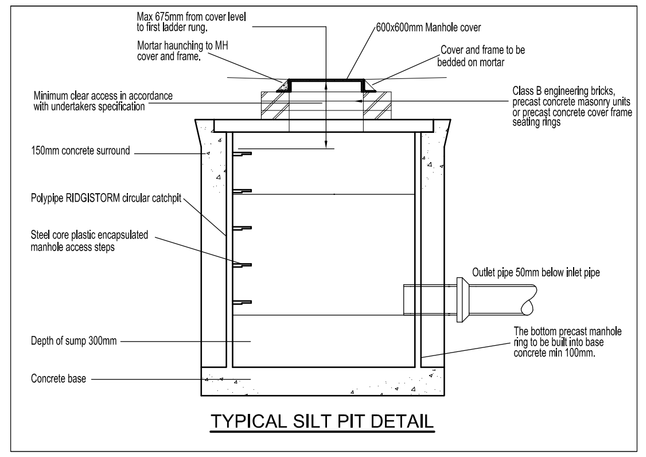

TYPICAL SILT PIT DETAIL

Proposed Drainage Plan
Scale 1:100@A1

NOTE
DO NOT SCALE FROM THIS DRAWING, UTILISE ONLY NUMBERED DIMENSIONS.
THIS DRAWING SHOULD BE READ IN CONJUNCTION WITH ALL RELEVANT ARCHITECTS AND ENGINEERS DRAWINGS, NOTIFY MP CONSULTING ENGINEERS IMMEDIATELY OF ANY DISCREPANCIES.
UNLESS NOTED OTHERWISE, THIS DRAWING IS FOR BUILDING REGULATIONS APPROVAL ONLY.
© MP CONSULTING ENGINEERS.
e: info@mp-consulting.co.uk
w: www.mp-consulting.co.uk

_LJ10-10 Admin\logos\qms 2008.jpg

KEY:
- Proposed Surface Water Manhole
- Proposed Surface Water Pipe
- Proposed Rainwater Pipe
- Proposed Foul Water Manhole
- Proposed Foul Water Pipe
- Proposed Siphonic Vent Pipe
- Existing Combined Manhole
- Existing Combined Pipe

RESIDUAL DESIGN RISKS:

- GROUND CONDITIONS - REFER SI FOR DETAILS OF STRENGTH, CONTAMINATION AND WATER TABLE FOR ALL EXCAVATION WORKS.
- REFER TOPO STATS TRACE FOR LOCATION OF ALL EXISTING SERVICES. THE MAIN CONTRACTOR IS RESPONSIBLE FOR LOCATING & CLEARLY MARKING AT THE SURFACE ALL EXISTING SERVICE/DRAINAGE RUNS.

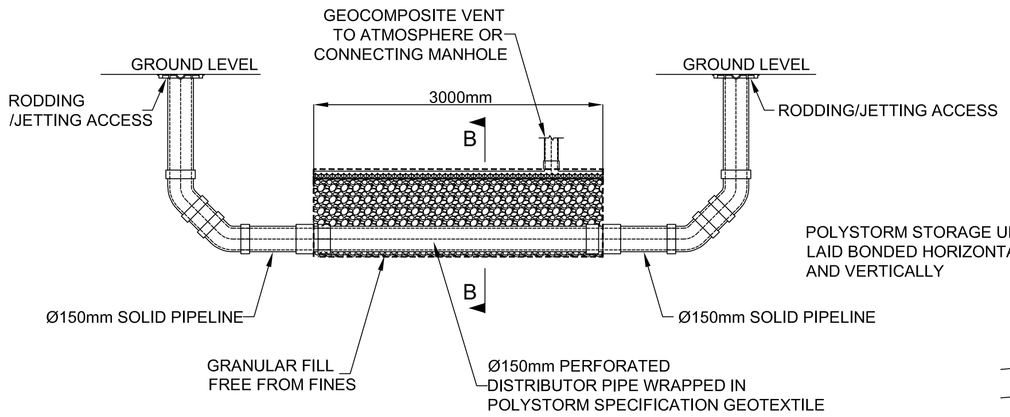

SECTION A-A

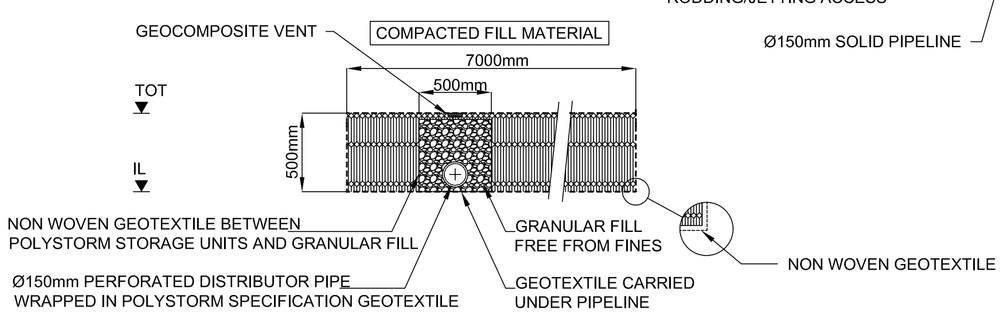

SECTION B-B

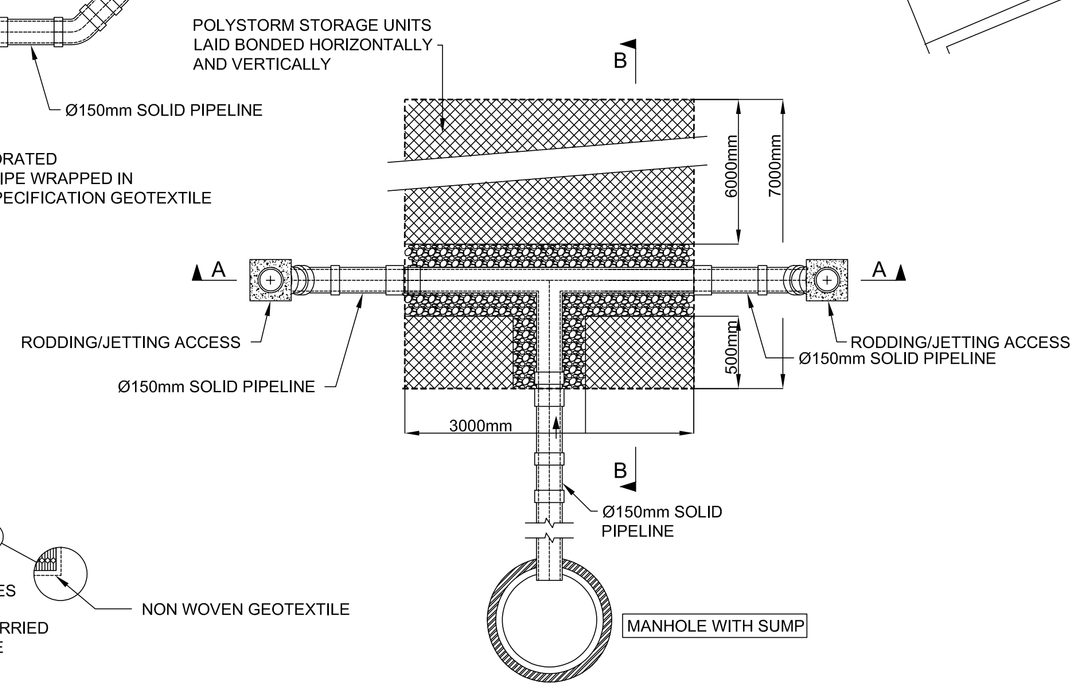

SOAKAWAY PLAN (INDICATIVE ONLY)

NOTES

1. ALL WORKS AND MATERIALS IN HEAVILY TRAFFICKED AREAS OR HIGHWAYS TO BE IN ACCORDANCE WITH SEWERS FOR ADOPTION, CURRENT EDITION. ALL DRAINAGE WITHIN BUILDING AREA, NON-TRAFFICED HARDSTANDINGS ETC TO BE IN ACCORDANCE WITH BUILDING REGULATIONS.
2. MANHOLE COVERS AND FRAMES TO BE 600 X 600 CLEAR OPENING, IN ACCORDANCE WITH EN 124, UNLESS NOTED OTHERWISE. MANHOLE COVERS WITHIN BUILDINGS TO BE DOUBLE SEALED AND RECESSED TO SUIT FINISH AS REQUIRED BY ARCHITECT.
3. VITRIFIED CLAY PIPES TO BE FLEXIBLY JOINTED AND COMPLY WITH THE REQUIREMENTS OF EN 295. CLAYWARE MAY BE REPLACED WITH SUITABLE PE PRODUCTS WITH AGREEMENT CERTIFICATION, SUBJECT TO APPROVAL OF BUILDING CONTROL / ADOPTING AUTHORITY.
4. CONCRETE PIPES TO COMPLY WITH THE REQUIREMENTS OF BS 5911, CLASS M STRENGTH AND TO BE FLEXIBLY JOINTED.
5. WHERE COVER TO PIPES IS LESS THAN 1200 IN ROADS AND HARDSTANDINGS OR 900 ELSEWHERE CONCRETE PROTECTION IS TO BE PROVIDED AS DETAIL, N.B UNTIL FINAL SURFACE IS PLACED, HEAVY TRAFFIC IS NOT TO BE ALLOWED OVER PIPE TRENCHES WITHOUT SPECIAL PROVISIONS.
6. PIPES AND FITTINGS ARE TO BE LAID IN ACCORDANCE WITH MANUFACTURERS RECOMMENDATIONS.
7. PERMANENT TRENCH REINSTATEMENTS ARE TO BE IN ACCORDANCE WITH THE HAUC SPECIFICATION FOR THE REINSTATEMENT OF OPENINGS IN HIGHWAYS, JUNE 1992.
8. SURFACE WATER STORAGE TANK, MIN COVER IN ACCORDANCE WITH MANUFACTURERS REQUIREMENTS TO SUIT 40KN/M² IMPOSED LOADING PLUS SOIL WEIGHT. TANK TO BE WRAPPED IN TERRAM WITH IMPERMEABLE GEOTEXTILE MEMBRANE TO TOP & SIDES. SUITABLE ACCESS FOR MAINTENANCE TO BE INCLUDED IN THE TANK. VENT IN ACCORDANCE WITH SUPPLIERS DETAILS.
9. REFER ARCHITECT FOR SETTING OUT OF ALL ABOVE GROUND DRAINAGE CONNECTIONS.
10. REFER ARCHITECT FOR DESIGN OF VENTILATION TO FW DRAINAGE RUN.
11. ALL ROAD GULLIES IN TO BE HEEL GUARD IN ACCORDANCE WITH CLIENT SPECIFICATION.
12. ALL ABOVE GROUND DRAINAGE TO BE IN ACCORDANCE WITH ARCHITECTS INFORMATION

Rev	Description	Date	Drn	Ckd
P01	Initial issue	01.08.25	RD	SP

Status
S2 - FOR INFORMATION

mp consulting engineers
CHARTERED CIVIL AND STRUCTURAL ENGINEERS
UNIT 3, MANSE LANE
MERCURY COURT
KNARESBOROUGH
HG5 8LF
T: 01423 861569

Project
Barn Conversion
Anchor Farm, Barnsley

Client
Ms A Weber

Drawing Title
Proposed Drainage Layout
Sheet 1

MP Sheet Ref	Sheet	Scale	Drawn
8344 - S - 0100	A1	As Shown	RD

BIM Ref Origin Vol Level Type Role Number Status Rev
8344 - MP - XX - 00- DR - S - 0100 - S2 - P01