

^ A - Fascia with Hockey Stick Projecting Sign [1:50]

Part illuminated fascia, O2 logo to illuminate only. Bubbles aligned centrally with O2 logo to left-hand end. Hockey stick to right-hand end. O2 logo: 385mm H



^ A - PLAN [1:50]

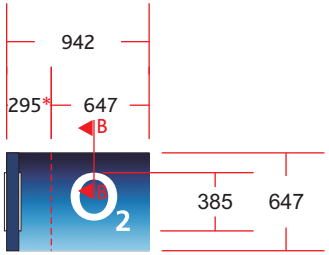

^ B - Hockey Stick Projecting Sign [1:50]

Part illuminated projecting sign, O2 logo to illuminate only. O2 logo: 385mm H

* Curved section of projection

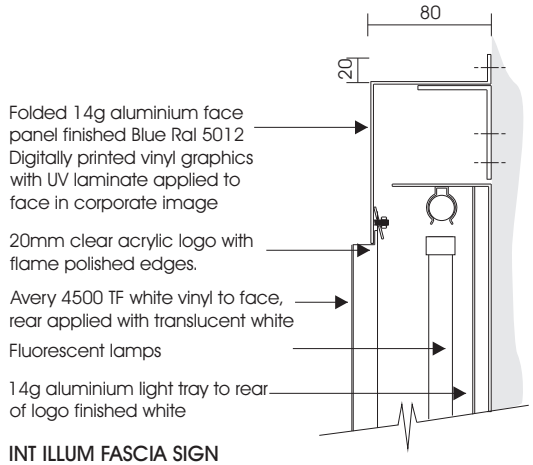

INT ILLUM FASCIA SIGN
SECTION DETAIL A-A

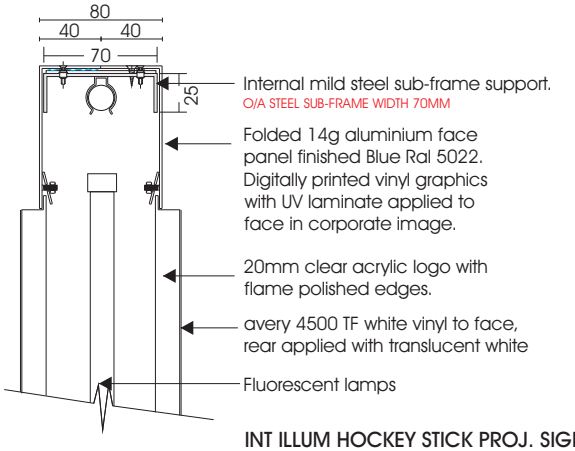

INT ILLUM HOCKEY STICK PROJ. SIGN
SECTION DETAIL B-B

Existing Elevation



Proposed Elevation



REVISIONS:	
A	
B	
C	
D	
E	

DATE: 28[10]09
SCALE: Shown
DRAWN: MC
CHECKED: RA

This print is copyright and should not be reproduced without the permission of © Gee-Tee Signs Ltd. 2006 - 2010
enquiries@geeteesigns.com
www.geeteesigns.com

ARTWORK FORMATS:
Corel Draw 13 (.cdr)
Adobe Illustrator 10 (.ai)
Encapsulated Post (.eps)
Freehand 9 (.fh)
AutoCAD 2000 (.dwg/.dxf)
Signlab 7 (.csl)
IF IN DOUBT ALWAYS ASK.

Gee Tee Signs Ltd.
Bestwood Road, Bulwell, Nottingham NG6 8SS
Tel (0)115 976 1188 Fax (0)115 976 1213

DESCRIPTION:
Layout & Visual - External Signs

CONTRACT NAME:
O2 - Barnsley

DRG. No
MC[09]1051