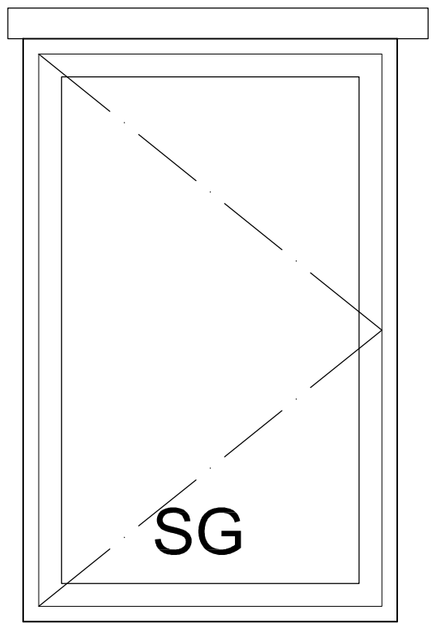

D01

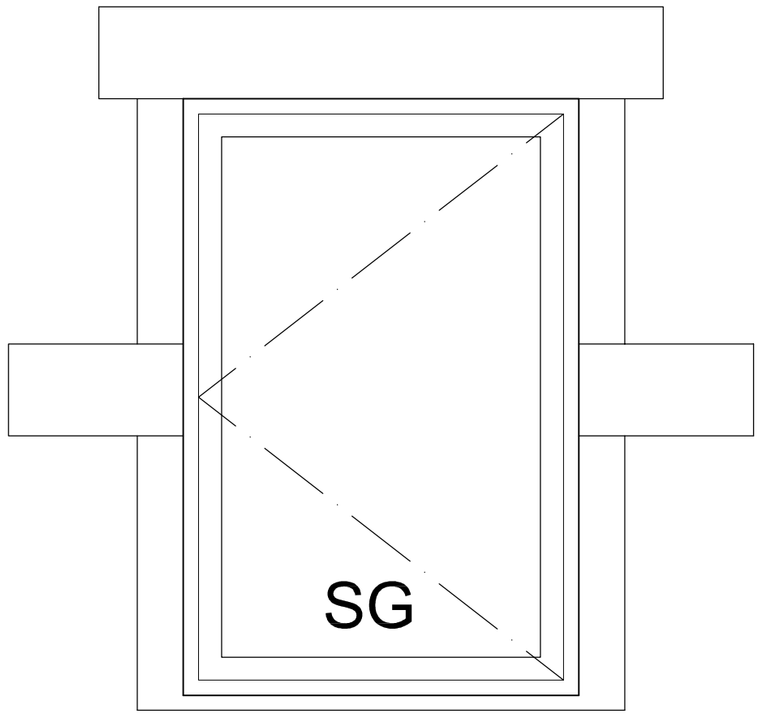

D04

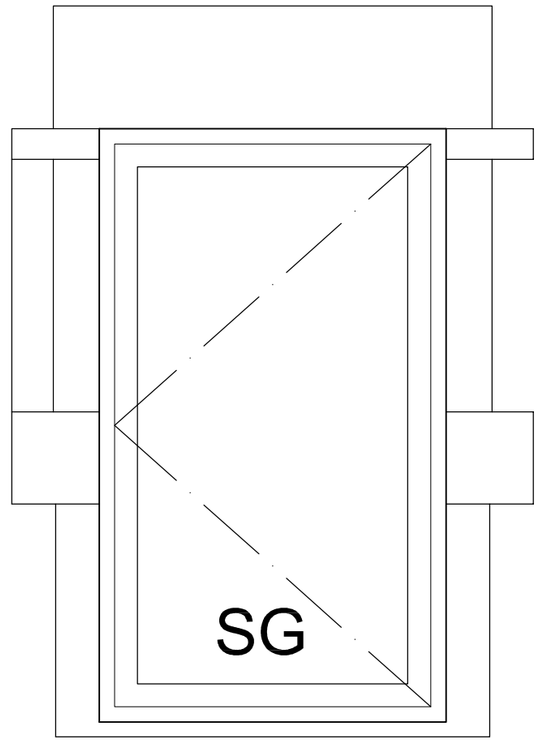

D05

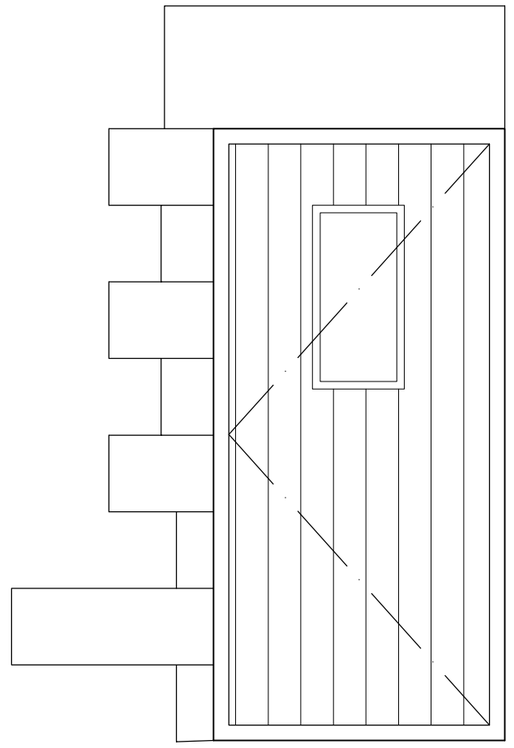

D07

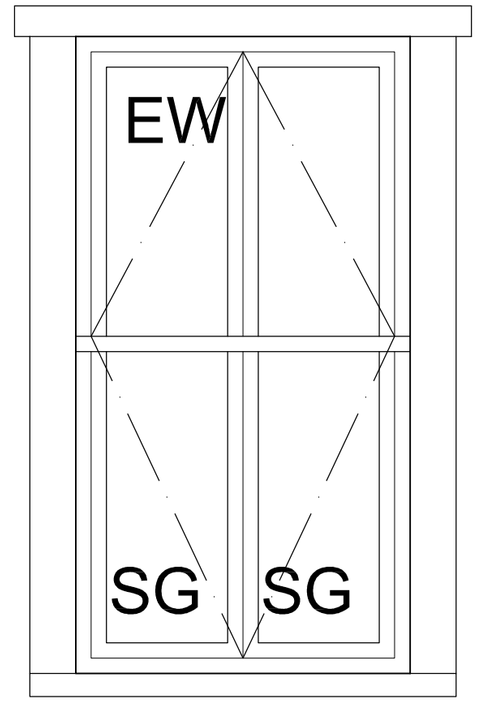

D14

Key:

SG	Safety glass
OBS	Obscure glazing
EW	Escape window with non-key operated fastener.

Notes:

All dimensions are to structural elements and discount plaster

All Door sizes are door leaf dimensions and not structural dimensions

All electrical work is required to meet the requirements of Part P and be designed, installed, inspected and tested by a person competent to do so.

	Height	Width	Opening	Opening	Glazing
D01	1902mm	1220mm	existing	See Above	double/safety
D04	1947mm	1290mm	existing	See Above	double/safety
D05	1936mm	1131mm	existing	See Above	double/safety
D07	1996mm	950mm	existing	See Above	double/Timber
D14	2078mm	1090mm	existing	See Above	double/MoE/safety

NB Dimensions to be site verified

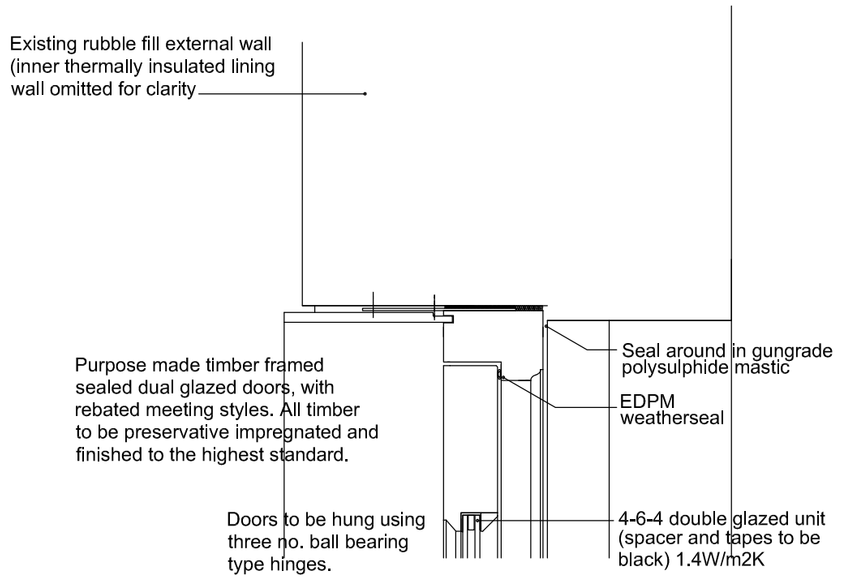

Head Detail 1:5 @ A2

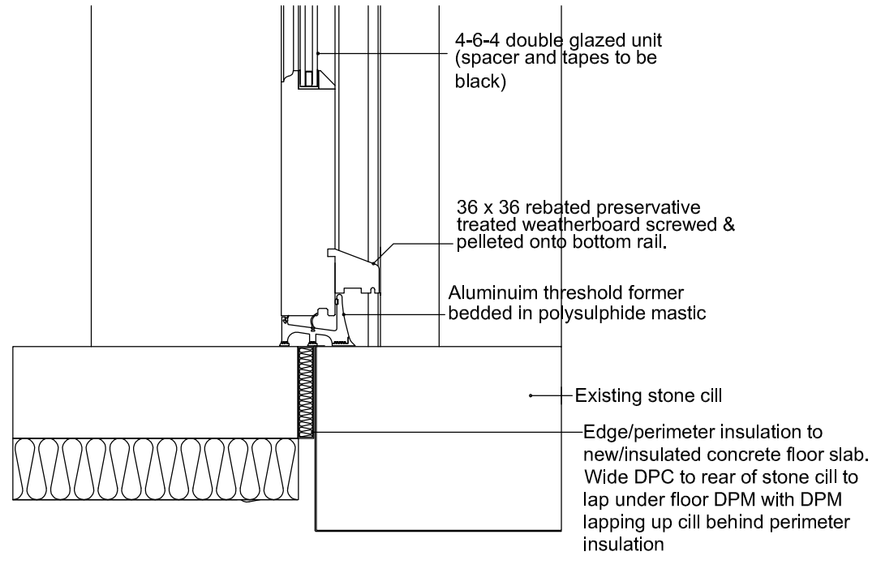

Sill Detail 1:5 @ A2

1:20

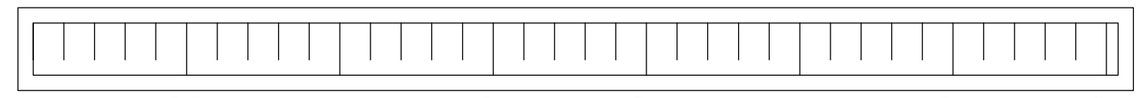

PAUL MATTHEWS ARCHITECTURAL Ltd

ARCHITECTURE | PLANNING | DESIGN

Malkin Farm
Brow Lane
Holmfirth
HD9 2RJ
07946872499
paul@paulmatthewsarchitectural.co.uk
www.paulmatthewsarchitectural.co.uk

Company Registration Number: 09898149 – Company Registered in England and Wales

Project
Barn Conversion to Two Dwellings at Green Farm, High Lane, Ingbirchworth, Penistone, Sheffield, S36 7GG

Client
Mr J Stafford & Mrs Crossfield

Drawing Title/Issue
Door Schedule & Details

scale	date	sheet size	dwg. no.
1:20 + 1:5	04/2022	A2	22/779/10