NOTE:
DOCUMENT FOR REFERENCE ONLY.
CHECK SHEET SIZE AND DRAWING
SCALE BEFORE PRINTING.

WHEN PRINTING PDF ENSURE PRINT
SCALE IN PRINTER PROPERTIES
IS SET TO OFF OR TO NONE

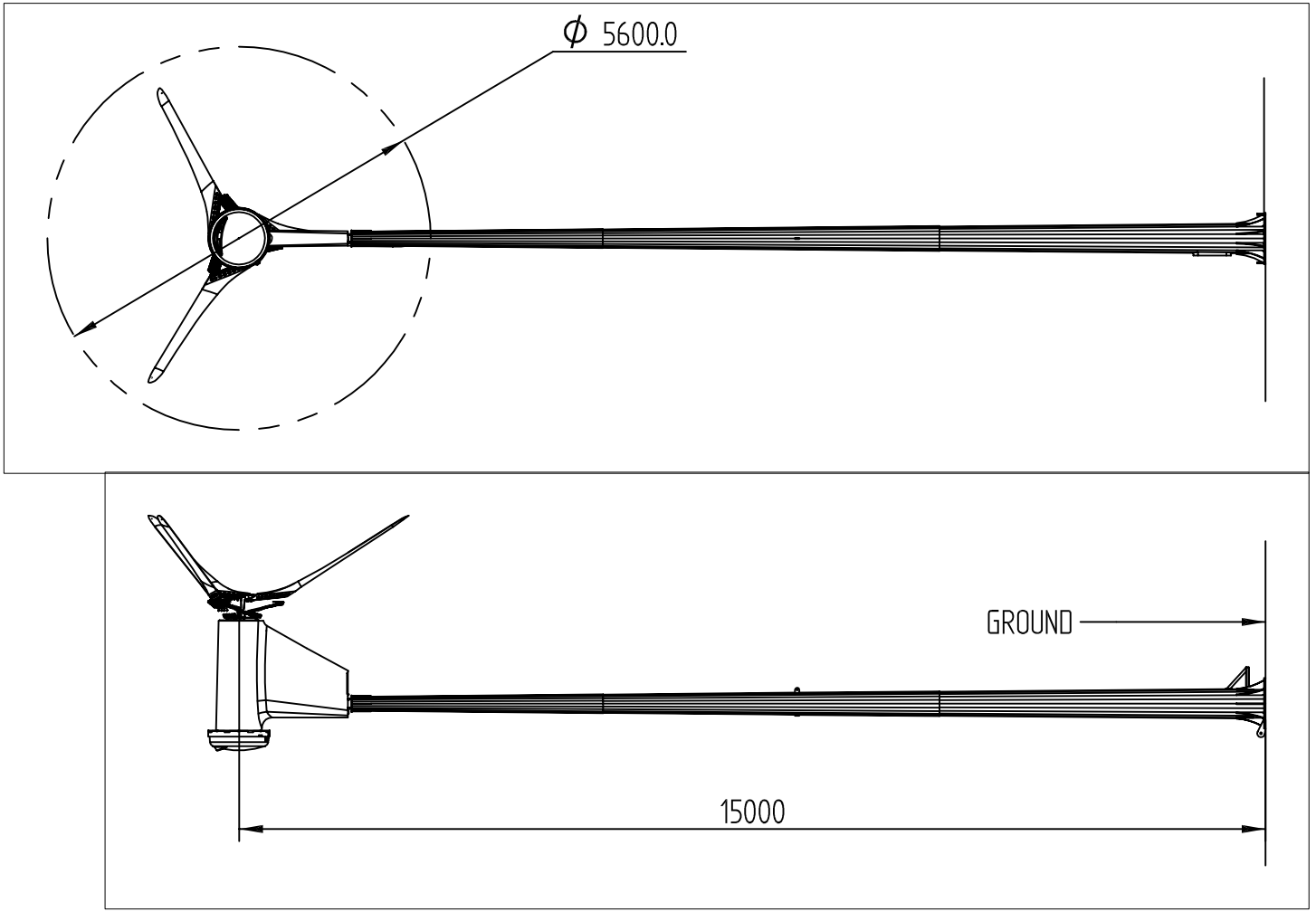

DOC JL 1

WEIGHTS:
Tower = 724 + 252 = 976kg
Turbine Head = 600Kg

COLOUR:
Tower and Frame – Galvanised Grey
Covers – White, RAL9003
Black, RAL9005

REV	DESCRIPTION	DATE	ECR	GRID REF.	ENG	SNR. ENG
A	COLOUR SPEC ADDED SCALING FOR PRINTING NOTE ADDED	13.01.11	395	N/A	AM	AM
B	11.6m FLANGE BOLTED VARIANT ADDED.	31.03.11	404	SHT3	AM	AM
C	Drawing Border Updated	09.11.11	N/A		PH	

REVISION HISTORY

GENERAL NOTES
DEBURR ALL SHARP EDGES
WELD SYMBOLS TO B.S.499 PRT 2C
WELDING TO BS EN 1011-2
GALVANISING OF COMPONENTS TO
CONFORM TO BS EN ISO 1461

Kingspan WIND

UNLESS OTHERWISE SPECIFIED
DIMENSIONS ARE IN MILLIMETERS
ANGLES ±0.1°
1 PL ±0.1 2 PL ±0.01

Projec. Ang.

Kingspan Renewables Ltd.
www.kingspandwind.com

	NAME	DATE
DRAWN	SC	01/04/10
CHECKED	A McN	01/03/10
DWG NO		SIZE A4 / REV C
SCALE: 1:100	WEIGHT:	SHEET 4 OF 5

TITLE: KW6 on 15m Brake Folded, Slip Jointed Tower
Material: | Finish:
Customer No.
Released for