A3

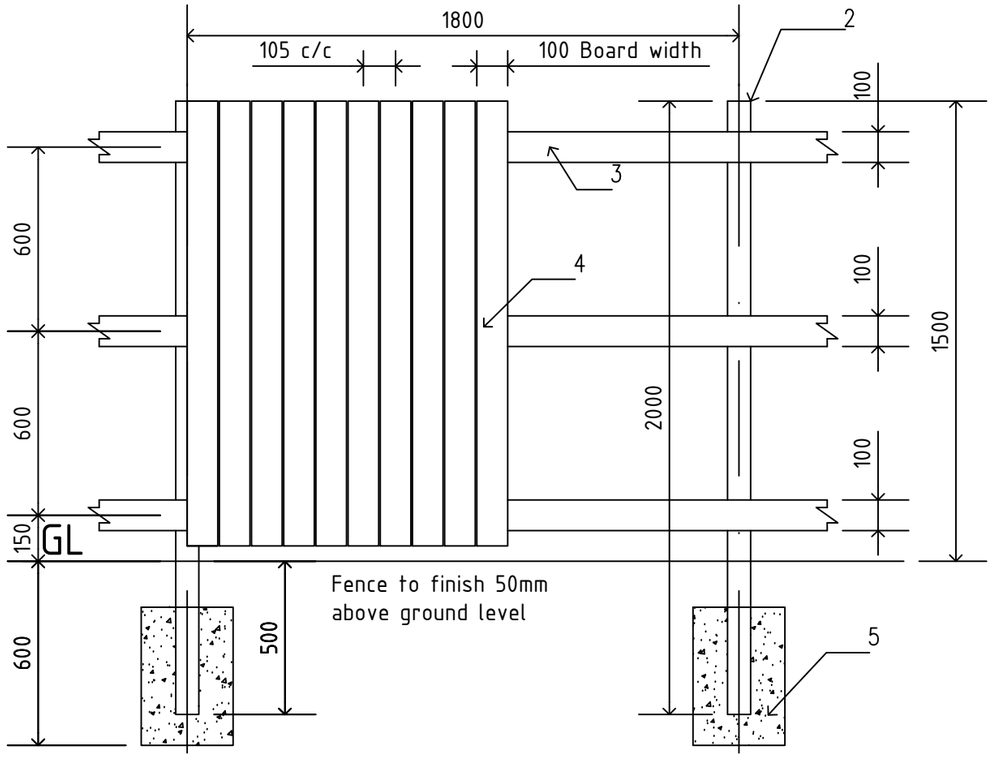

1500mm High Close Boarded Fence '3 Rail' (F/CB/1500)

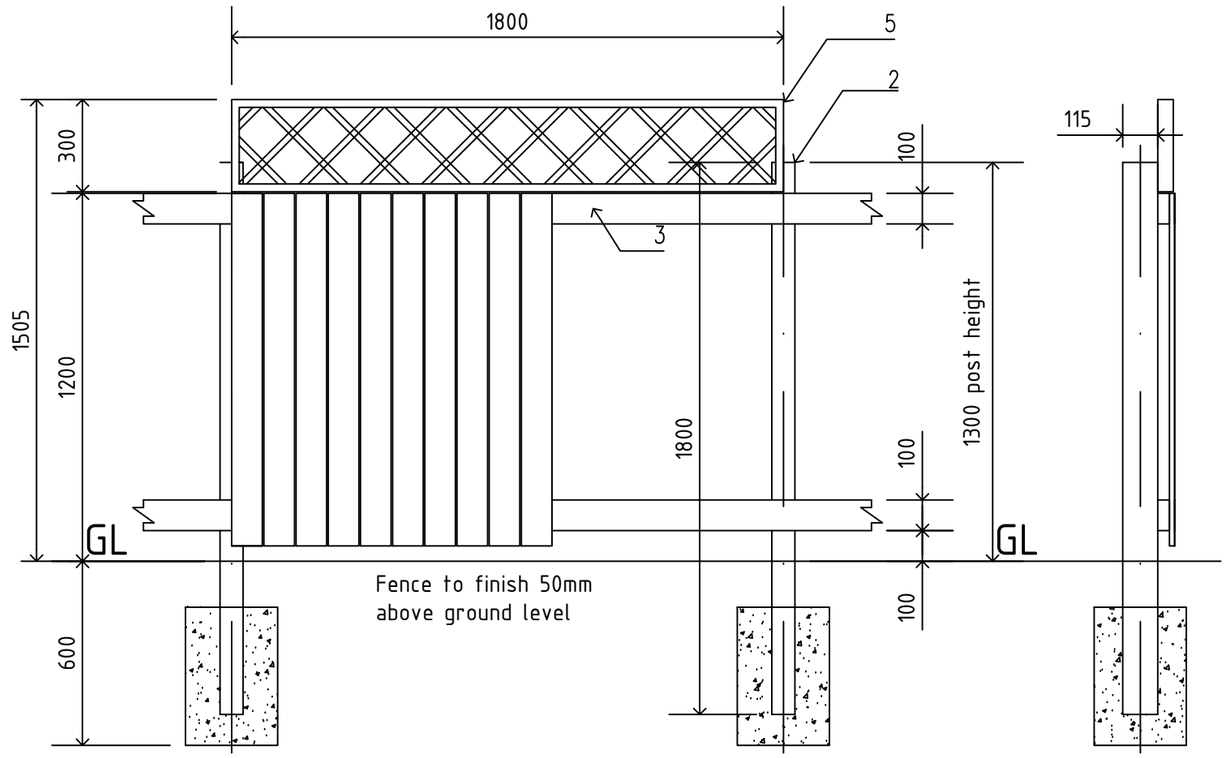

(F/CB-T/1500)
1200mm High Close Boarded Fence with Trellis '2 Rail'

1 All Timber work shall be Tanalised or treated with Tanatone (Colour Mid Brown)

2 115 x 75mm s.w. Timber Posts

3 100 x 38mm s.w. Timber Rails

4 100 x 17mm min. Timber Close Boarded

5 1800 x 300mm Pre-made Timber Trellis

6 Timber Posts encased in 300 x 300 x 450mm lean mix Concrete (where necessary).

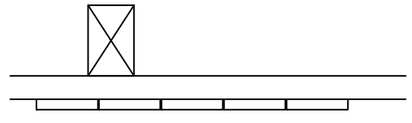

Typical Section & (Plan 1:10)

REV	DATE	DESCRIPTION	INTL.
A	03.08.12	Basic 1500mm Close-Boarded option added.	JRW

Partner

Job Title

PARTNER STANDARD DETAILS
BOUNDARY TREATMENT

Dwg. Title

1500 CLOSE BOARDED FENCE DETAILS
(WITH AND WITHOUT 300MM TRELLIS)

Drawn	Checked	Dwg. No.
LW	-	BT / SHEET 14
Scale 1:20	Date 13.09.11	