DESIGN AND ACCESS STATEMENT

CO-ORDINATES: X428357, Y401911

PULE HILL FARM, RAG LANE, THURGOLAND, S35 7BA

PROPOSED SITING OF 1 x 24.8M HIGH (HUB) WIND TURBINE WITH A TIP HEIGHT OF 34.5M

Our Ref: P1067 Warttig

September 2013

DESIGN AND ACCESS STATEMENT

CONTENTS **PAGE**

1.0	INTRODUCTION TO THE PROPOSAL.....	3
2.0	THE SITE DETAILS AND BACKGROUND.....	7
3.0	PLANNING POLICY.....	8
4.0	CONSIDERATION.....	14
5.0	CONCLUSION.....	35

APPENDICES:

APPENDIX A - METHODOLOGY USED FOR ASSESSING VISUAL LANDSCAPE IMPACT

APPENDIX B – PHOTOMONTAGES

1.0 Introduction to the Proposal

1.1 This desktop assessment sets out our analysis of the relevant planning policy principles which need to be considered in support of this application for the erection of one 24.8m high (hub height) wind turbine at Pule Hill Hall Farm, S35 7BA. The turbine would have an overall height of approximately 34.5m to the tip. This is a revised application submitted following the withdrawal of an earlier application due to a NATS objection. This lower hub is designed to overcome the objection previously raised.

Use

1.2 The site itself consists of a listed building and is an operational farm. The surrounding countryside comprises generally of farmland off the A629 to the north west of Sheffield. The proposed turbine would introduce a different use but would remain intrinsically linked with the agricultural use of the land in that it would harvest the natural resources of the land much in the way agricultural activities do. The effects of this are analysed within the consideration chapter of this report.

Amount

1.3 The development proposal involves the provision of one endurance wind turbine and associated infrastructure comprising the following specifically:

- Base work to secure the turbine to the site
- Grid connection

The amount of work involved is consequently limited. The applicants currently have a single turbine (Gaia) following the approval of an earlier scheme for a Proven wind turbine. This application would consequently be an additional wind turbine. The effects of this are analysed within the consideration chapter of this report.

Scale

1.4 The scale of the development is derived from the turbine's height as the nature of this turbine has a very slim profile. The proposals seek the erection of one 24.8m high (hub

height) wind turbine which would have an overall height of approximately 34.5m to the tip. This is illustrated in the following image.

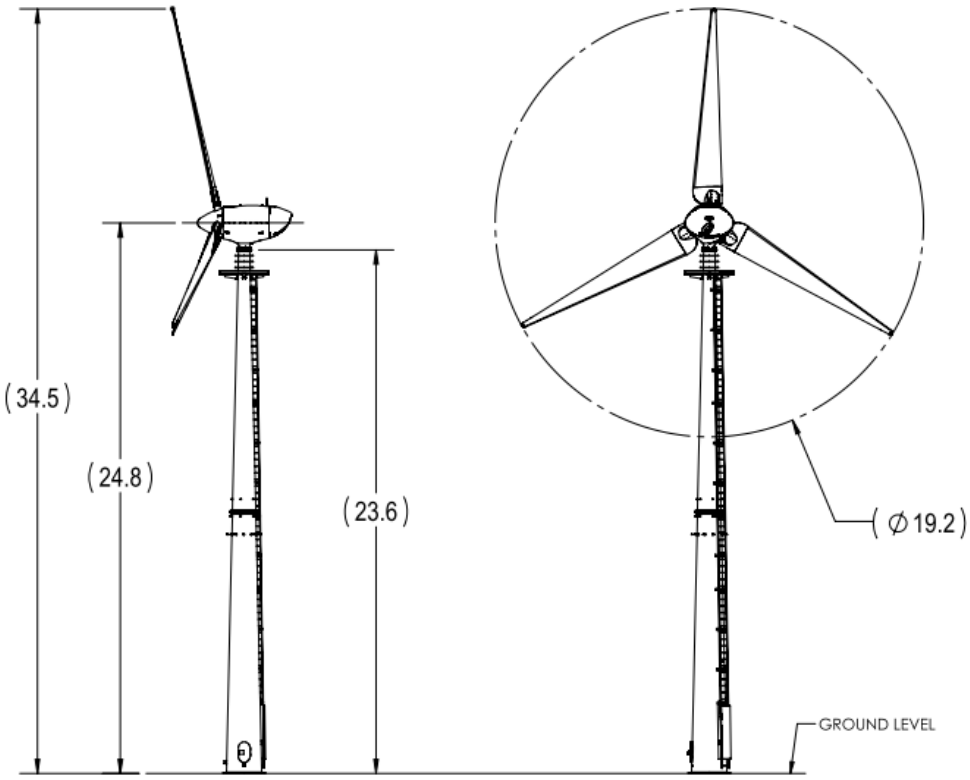

Image 1: Elevation Plan of the Turbine

1.5 The effects of this scale of turbine are analysed within the consideration chapter of this report.

Layout

1.6 From an operational standpoint, the siting of a wind turbine requires maximum exposure to unobstructed wind flow conditions in order to achieve efficient operation. Proximity to ground based obstructions can detrimentally affect the performance of a turbine and it is therefore essential to ensure that a wind turbine is located a sufficient distance away from any such obstacles to provide the necessary clearance. After taking into consideration these factors, the siting point for the turbine has been chosen from both an operational/technical and a visual impact perspective and has been sited in the proposed location to ensure that the turbine's operation is not adversely affected by turbulence caused by the tree belt to the

east. The proposed layout of the turbine and associated works is indicated in the following site location plan and remains the same as previously proposed.

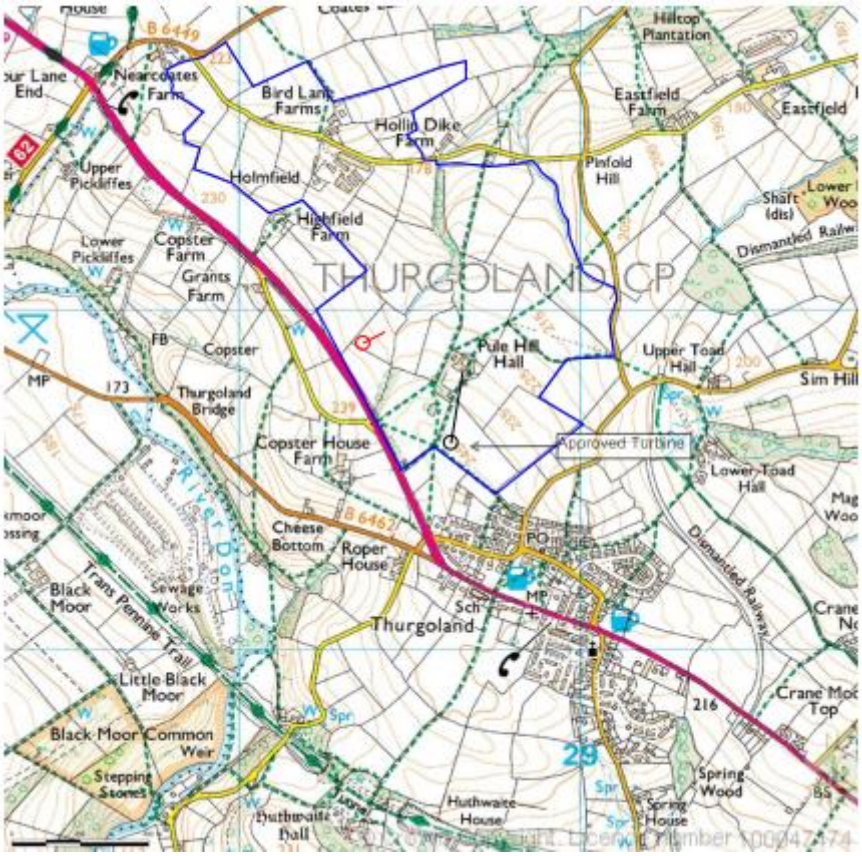

1.7 The effects of this layout and positioning of the turbine are analysed within the consideration chapter of this report.

Landscaping

1.8 No landscaping is proposed as part of this planning application, however, all disruption to the landform such as through the cable run would be returned back to ensure that the existing landscaping is maintained. The effects of this are analysed within the consideration chapter of this report.

Appearance

1.9 The proposals seek a traditional three blade horizontal axis wind turbine. The appearance of wind turbines is standard. Endurance use industry standard neutral matte finish paints. These are designed to absorb light and blend into a dull grey cloudy background, as

illustrated in the manufacturer's datasheet. The effects of the appearance of this turbine are analysed within the consideration chapter of this report particularly within the Landscape and Visual Impact section.

Access

1.10 Access to the site for the installation is likely to be easy as the site is currently served by an existing gate to the south from the main highway (A629). The proposed turbine would be delivered in parts and so does not necessitate unduly large vehicles that require specific requirements for the installation. The effects of this are analysed within the consideration chapter of this report.

Climate Change Mitigation

1.11 The proposed wind turbine would complement the approved wind turbine by providing an additional wind turbine which would feed directly into the grid contributing to the UK's climate change obligations. The whole thrust of this application is therefore based on climate change mitigation.

1.12 The main planning considerations are considered within this report in relation to local and national planning guidance.

2.0 The Site Details and Background

2.1 The application site is located within the open countryside approximately 250m to the north of Thurgoland. The turbine would be positioned within the land owned by and associated with the Pule Hill Hall Farm, to the south of the farmstead by approximately 200m.

2.2 At the time of Domesday in 1086, Thurgoland was called 'Turgesland', the land of a Saxon named 'Turges'. The land was part of the Yorkshire 'Kingdom' of Ailric, but after the Norman Conquest the lands were given to the De Lacys. The manor house in Thurgoland was Pule Hill Hall Farm – the applicant's property. The lords of the manor took the name 'Thurgoland', and in 1622 George Thurgoland sold Pule Hill Hall Farm to John Bamford. The manor house was then taken on by the Keresforths, a prominent Barnsley family, in 1671. Key to the development of Thurgoland was the Cockshutt family. James Cockshutt, an important figure in the early wire-making industry, owned Wortley Top Forge. He also operated three wire-drawing mills in Thurgoland – Tilt Mill, Old Wire Mill and New Wire Mill on the River Don.

2.3 Pule Hill Hall Farm is located off Rag Lane to the north, accessed via a farm track approximately 350m in length. The property is a grade II listed building along with the adjoining cottage to the left and they were listed collectively in 1968. The cottage is dated 1671, with C18 alterations and has a rendered rear, coursed dressed stone to the garden front and stone slates on the roof of the cottage with concrete roof tiles on the house.

2.4 There are various farmsteads and buildings in the locality, but the area's overall character is rural. The area around the site is relatively undulating within 400m in all directions, with the land rising to the north from Rag Lane before dropping again to the north and east. The application site is located within the council's Green Belt and the council's Area of Borough Landscape Value.

2.5 The nearest neighbouring property to the farm is Pule Hill Lodge, which sits at the start of the farm access track on Rag Lane and is located approximately 380m to the south east from the proposed siting of the wind turbine. Grants Farm to the west is the nearest neighbouring property to the turbine and would be approximately 335m away.

2.6 A copy of the plan, as contained in the accompanying planning documents, illustrates the proposed siting.

3.0 Planning Policy

3.1 The government's National Planning Policy Framework (NPPF) was adopted on 27 March 2012 and represents the principal national guidance document and a material consideration which must be taken into account, where relevant, in determining planning applications. This framework replaces all previous national policy statements, which were superseded on its adoption. Statements contained within cannot make irrelevant any matter which is a material consideration in a particular case, but where such statements indicate the weight that should be given to relevant considerations, decision makers must have proper regard to them. One particular consideration which will be teased out in this report is the weight which should be given to the appropriateness of development both within the countryside and any specific landscape designation versus the weight associated with the wider environmental benefits of a wind turbine.

3.2 At the heart of the NPPF is a presumption in favour of sustainable development, which should be seen as a golden thread running through both plan-making and decision-taking. Sustainable development encompasses concepts of sustainable economic, social and environmental development which run concurrent with the spatial approach to planning. Key to this application, the following excerpts are applicable to a proposed wind turbine for this site:

Renewable Energy

3.3 To help increase the use and supply of renewable and low carbon energy, local planning authorities should recognise the responsibility on all communities to contribute to energy generation from renewable or low carbon sources. They should:

- Have a positive strategy to promote energy from renewable and low carbon sources;

3.4 When determining planning applications, local planning authorities should:

- Not require applicants for energy development to demonstrate the overall need for renewable or low carbon energy and also recognise that even small-scale projects provide a valuable contribution to cutting greenhouse gas emissions; and

- Approve if its impacts are (or can be made) acceptable. Once suitable areas for renewable and low carbon energy have been identified in plans, local planning authorities should also expect consequent applications for commercial scale projects outside these areas to demonstrate that the proposed location meets the criteria used in identifying suitable areas.

Heritage Assets

3.5 When considering the impact of a proposed development on the significance of a designated heritage asset, great weight should be given to the asset's conservation. The more important the asset, the greater the weight should be. Significance can be harmed or lost through alteration or destruction of the heritage asset or development within its setting. As heritage assets are irreplaceable, any harm or loss should require clear and convincing justification. Substantial harm to or loss of a grade II listed building, park or garden should be exceptional. Substantial harm to or loss of designated heritage assets of the highest significance, notably scheduled monuments, protected wreck sites, battlefields, grade I and II* listed buildings, grade I and II* registered parks and gardens, and World Heritage Sites, should be wholly exceptional.

3.6 Clearly the intentions of the NPPF are not intended to create a blanket approval of wind turbines across the country and of course regard should be given to the sensitivity of the landscape to accommodate wind turbine development especially given that this is within the Green Belt. Here NPPF is much more specific than PPG2 was to wind turbine development and clarifies the position that the stance taken by the Local Planning Authority (LPA) in determining the application at White House Farm is simply incorrect.

3.7 The NPPF states that the government attaches great importance to Green Belts. The fundamental aim of Green Belt policy is to prevent urban sprawl by keeping land permanently open; the essential characteristics of Green Belts are their openness and their permanence. Green Belt serves five purposes:

1. To check the unrestricted sprawl of large built-up areas;
2. To prevent neighbouring towns merging into one another;
3. To assist in safeguarding the countryside from encroachment;

4. To preserve the setting and special character of historic towns; and

5. To assist in urban regeneration, by encouraging the recycling of derelict and other urban land.

3.8 Once Green Belts have been defined, local planning authorities should plan positively to enhance the beneficial use of the Green Belt, such as looking for opportunities to provide access; to provide opportunities for outdoor sport and recreation; to retain and enhance landscapes, visual amenity and biodiversity; or to improve damaged and derelict land.

3.9 As with previous Green Belt Policy (PPG2), inappropriate development is, by definition, harmful to the Green Belt and should not be approved except in very special circumstances. When considering any planning application, local planning authorities should ensure that substantial weight is given to any harm to the Green Belt. 'Very special circumstances' will not exist unless the potential harm to the Green Belt by reason of inappropriateness, and any other harm, is clearly outweighed by other considerations.

3.10 When located in the Green Belt, elements of many renewable energy projects will comprise inappropriate development. In such cases developers will need to demonstrate very special circumstances if projects are to proceed. The NPPF specifically states '**Such very special circumstances may include the wider environmental benefits associated with increased production of energy from renewable sources**'.

3.11 The determination of this application should give full weight to the NPPF as a material planning consideration and the thrust of this framework is considered within this DAS alongside the council's own local planning policies which remain relevant.

<u>Planning Practice Guidance for renewable Energy and Low Carbon Energy</u>

3.12 At the end of July 2013 the Companion Guide to PPS22 was replaced by the above document. The document states that increasing the amount of energy from renewable and low carbon technologies will help to make sure the UK has a secure energy supply, reduce greenhouse gas emissions to slow down climate change and stimulate investment in new jobs and businesses. Planning has an important role in the delivery of new renewable and low carbon energy infrastructure in locations where the local environmental impact is acceptable

3.13 Barnsley Borough Council has recently adopted its Local Development Framework Core Strategy with this providing the strategic objectives and core policies which will now be used to guide development in the area, along with the remaining 'saved' policies from the Unitary Development Plan. Consideration on the local level with regards to the Green Belt issue is given to Policy CSP34 of the Core Strategy which seeks to safeguard against inappropriate development in this locality and specifies that development will not be permitted within the Green Belt unless there are very special circumstances which will justify allowing the development. One such development that can indeed bring economic and environmental benefits that might be considered to outweigh any perceived harm caused to the openness of the Green Belt land in which the proposed development is sited.

3.14 The application site is also within one of the Borough's designated areas of Landscape Character which are recognised as being of higher landscape quality than other countryside areas. The Areas of Landscape Character are also in the Green Belt and development will therefore be limited to that which is appropriate in such areas in accordance with Policy CSP37, which seeks to conserve the character of the area, and should, wherever possible, positively enhance the environment through its location, siting, scale, design, materials and landscaping.

3.15 Of particular importance to the assessment of this application is Policy CSP6 which sets out the council's requirements for proposals that seek to develop and produce renewable energy. Development will be allowed where it can be shown there would be no significantly harmful effect on:

- the character of the landscape and appearance of the area
- living conditions
- biodiversity, geodiversity and water quality
- heritage assets, their settings and cultural features and areas
- highway safety, and
- infrastructure including radar.

3.16 Also of importance is Policy ES12c of the Unitary Development Plan, which was 'saved' and remains an important consideration. This policy states that the council will control development in the vicinity of existing wind generation installations so as to safeguard these from a reduction in local wind speeds.

3.17 Finally, of more general relevance is policy CSP29 which sets out the design principles and standards for all development. Development proposals will be expected to demonstrate that it respects, takes advantage of and enhances the distinctive features of Barnsley, including:

- topography, green infrastructure assets, important habitats, woodlands and other natural features
- views and vistas to key buildings, landmarks, skylines and gateways
- heritage, townscape and landscape character including the scale, layout, building styles and materials of the built form particularly in and around:
    - Barnsley Town Centre
    - Penistone and the rural villages in the west of the borough
    - within and adjacent to conservation areas

Development should also:

- contribute to place making and be of a high quality, that contributes to a healthy, safe and sustainable environment
- help to transform the character of physical environments that have become run down and are lacking in distinctiveness
- enable all people to gain access safely and conveniently, providing, in particular, for the needs of families and children, and of disabled people and older people
- contribute towards creating attractive, sustainable and successful neighbourhoods
- achieve a Building For Life assessment rating of 'good' or equivalent as a minimum, in developments of 10 or more dwellings.

3.18 It is clear from the above policies that the provision of renewable energy is encouraged in the District and although turbines are deemed an inappropriate development in principle in the Green Belt, the benefits of this type of renewable energy provision and the governments direction on such matters can and does override Green Belt planning policy. The application is likely to be assessed against the above criteria and these are considered in detail within this report and it is considered that the proposals can be accommodated on this site without adversely affecting the principles of this policy.

4.0 Consideration

4.1 As previously identified, there is a presumption in favour of renewable technologies and significant weight should be attributed to this issue in line with government policy. This issue should be balanced against other main considerations including the impact upon the character and appearance of the area, archaeological and nature conservation issues and any adverse impact upon the electromagnetic field. Each issue will be considered individually within this desktop assessment.

Principle of Development

4.2 The application site is located within the council's Green Belt and consideration must be given to the NPPF which now replaces Planning Policy Guidance 2 (PPG2). Green Belts have been perhaps the best known feature of the planning system since the 1950's and continue to command widespread support. The protection of the Green Belt is an overriding planning consideration and one, which in the case of most forms of development, strongly militates against the granting of planning permission. However, having been a feature of the planning system since the 1950's the policies and traditional considerations applied to development within the Green Belt are not necessarily up to date with the ever changing climate change issue and weight should now be given to the environmental benefits from proposals such as wind turbines against the background of Green Belt policies. Very special circumstances will be required to justify instances where this presumption against development should not apply.

4.3 The principle of wind turbines would not accord with the forms of development deemed acceptable in the Green Belt and its very nature is therefore deemed inappropriate in principle within the Green Belt under this policy context. Notwithstanding this, PPG2 – Green Belts did stipulate that '*Very special circumstances to justify inappropriate development will not exist unless the harm by reason of inappropriateness, and any other harm, is clearly outweighed by other considerations'.* The NPPF replaces this consideration stating that 'very special circumstances' will not exist unless the potential harm to the Green Belt by reason of inappropriateness, and any other harm, is clearly outweighed by other considerations. When located in the Green Belt, elements of many renewable energy projects will comprise inappropriate development. In such cases developers will need to

demonstrate very special circumstances if projects are to proceed. The NPPF specifically states '**Such very special circumstances may include the wider environmental benefits associated with increased production of energy from renewable sources**'. Given the national planning policy context and the greater emphasis that is now placed within the planning system on renewable energy provision, it is considered that the environmental benefits of small scale renewable projects such as this would represent 'very special circumstances'. Indeed, this issue was recently discussed in an appeal at land adjacent to Ramsgill, Otley Road, Bingley (APP/W4705/A/09/2118825) in relation to PPG2. This appeal (decision attached with this report in Appendix C) related to a 15m high wind turbine within the Harrogate Green Belt and the Planning Inspector in allowing the appeal accepted that Green Belt planning policy principles would dictate that the principle of wind turbines was inappropriate and would, to an extent, result in some loss of openness. Nevertheless, in reaching the decision to allow the appeal the Inspector concluded:

4.4 *'I attach substantial weight to the harm to the Green Belt by reason of inappropriateness. As there would be a modest loss of openness within the Green Belt, I find only a limited degree of other harm. Set against this is the significant weight that I give to the wider environmental benefits associated with increased production of energy from renewable sources. When weight against one another, the other considerations do clearly outweigh the harm to the Green Belt by reason of inappropriateness and the other harm in relation to openness within the Green Belt. In my judgement very special circumstances do therefore exist and justify a grant of planning permission'.*

4.5 This appeal decision does set the issue of Green Belt principles versus renewable energy principles into context and the overriding conclusion is that the principle of renewable energy provision can represent special circumstances that justify planning consent. This is now underlined in the wording of the NPPF. It must be acknowledged that the proposed turbines would represent inappropriate development in the Green Belt. The balancing considerations that must be assessed are therefore the 'substantial weight to the harm to the Green Belt by reason of inappropriateness' versus:

1) The extent of visual and landscape harm and consequent loss of openness.

2) The wider environmental benefits of the scheme through the increased production of energy from renewable sources.

Landscape and Visual Impact Assessment

4.6 The proposed wind turbine would be positioned to the west of the farmstead north of the A629 and would measure 24.8m high to the hub, with the blades extending to reach a tip height of 34.5m. In this location and at this height the turbine would be visible and would, to an extent, change the appreciation of this site within its surrounding rural Green Belt context. The process of assessing the impact of this application has been guided by the document 'Guidelines for Landscape and Visual Impact Assessment'(2013) utilising photomontages as guiding tools. This is commonly used for large scale schemes however the principles can be used on even the smallest scheme and the principles have therefore been adopted with this application to offer a robust assessment of the visual impact of the proposed turbine. Appendix A of this report outlines the approach taken here within this desktop assessment.

Landscape Character Assessment

4.7 The application site is located within the Nottinghamshire, Derbyshire & Yorkshire Coalfield Landscape Character Area (38) where the following landscape characteristics are applicable to the application site:

- Widespread evidence of industrial activity including mine buildings, former spoil tips and iron and steel plants.
- Complex mix of built-up areas, industrial land, dereliction and farmed open country.
- Many areas affected by urban fringe pressures creating fragmented and downgraded landscapes.
- Substantial areas of intact agricultural land in both arable and pastoral use.
- Small, fragmented remnants of pre-industrial landscape and semi-natural vegetation, including many areas of woodland, river valley habitats, subsidence flashes and other relict habitats.
- Ever-present urban influences from major cities, smaller industrial towns and mining villages.

- Widespread influence of transport routes, including canal, road (M1, M62) and rail, with ribbon developments emphasising the urban influence in the landscape.
- Rolling landforms with hills, escarpments and broad valleys.
- Local variation in landscape character reflecting variations in underlying geology.
- Strong cultural identity arising from history of coal mining and other heavy industry.

4.8 The application site is also located within the council's designated Green Belt and within the designated Area of Landscape Character. The production of a Landscape Character Assessment provides a brief description of the landscape type within the borough including what can be expected to be there. An assessment has been made of Barnsley's landscape by the council but has not been produced in a format easily available to the general public. Consequently, the baseline character assessment has been based on a combination of the national landscape character area, the Green Belt and associated policy justification.

4.9 The scale of the landscape is one of the primary characteristics likely to require consideration. For instance, is it small scale and intimate or large scale and expansive? In this particular case, although field sizes are generally small scale, the gently undulating nature does contribute to a wider sense of scale. The turbine would be positioned in relation to other vertical features in the landscape too such as the telegraph poles, the tree belt and beyond this the approved turbine. Set in this context height and scale of the turbine has sought to complement the landscape and be appropriate in scale in visual context with the tree belt and smaller more varied fields.

4.10 The landscape is underpinned by generally low and undramatic but variable hills, escarpments and broad valleys. It is dominated everywhere by extensive urban influences and industry. There has been constant change and development since the era of the industrial revolution, when there was rapid expansion of housing, transport networks and industry of many types. The result is a complex intermingling of rural and urban areas and of modern commerce and industrial dereliction, the whole creating a mosaic of disparate land uses and land cover. The introduction of this single small-scale turbine set in this landscape context would ensure the pattern of human activity is related to existing human activity rather than intruding into more open isolated parts of the landscape area. Even small turbines have the potential to dominate small scale topography and care has been taken not

to introduce a scale of turbine which would have an overbearing presence on complex or intricate landforms. The landform does rise and fall and the turbine would be invariably seen appearing on a brow and skylined in this respect a turbine scale and model has been selected that does not appear to intrude so significantly above the existing landscape features such as the tree belt that there would be an over riding detraction away from the true characteristics of this part of the Nottinghamshire, Derbyshire & Yorkshire Coalfield Landscape Character Area.

4.11 The development here would result in the introduction of a vertical feature within the landscape which would have some micro visual and landscape impacts. However it is an agricultural scale turbine and at this scale is unlikely to have such a presence that there would be minimal impact on the key characteristics of the landscape. The proposals would not remove any of the key characteristics of the sub area and the design has sought to respect key landscape characteristics in design and scale as set out above. The more localised visual effects are considered below, with the aid of photomontages assisting the assessment.

Landscape Visual Impact

4.12 An assessment of the visual impact of the proposed turbine has been made of utilising photomontages as guiding tools. These photomontages are attached as Appendix B. The following table demonstrates this assessment of these photomontages:

Table Detailing the landscape and visual impact					
Site/Feature	***Location and Distance from Turbine***	***View and Assessment***	***Receptor Sensitivity***	***Magnitude of Impact***	***Impact Assessment***
Photomontage 1 - SE 28613 01845	250m to the west	Turbine is seen on the rising land so does dominate the vista but the location of the tree belt and telegraph pole set to the rear on higher land does aid in providing a visual scale to the vista and ensuring that the turbine does not appear isolated. There would be a	Low as applicants property	Medium	Slight Adverse

		moderate impact on the view characteristics here			
Photomontage 2 - X 428331,401805	120m to the south	The turbine would be on the slightly lower ground level but would still dominate the vista due to its vertical nature. It would also be relatively close to the highway and skylined. Nevertheless the view is wide and expansive, open in nature and these characteristics would remain untouched but punctuated by the single turbine. As the view is from the A629 any impact would be transient in nature as the user travels along the highway.	Low as the A629	Medium	Slight Adverse
Photomontage 3 - X427899, Y402257	600m to the west	The turbine would be a skyline feature appearing to be on the brow of a hill. The turbine would be seen at a distance though and would relate well to other vertical landscape features such as the tree belt. Set in this context the turbine would not dominate and would result in a limited change in the view characteristics.	High as adjacent to residential properties at Low Road	Low	Slight Adverse
Photomontage 4 - X427903, Y402751	940m to the north west	The turbine would again be a skyline feature appearing to be on the brow of a hill. The turbine would be seen at a distance though and would relate well to the tree belt in the foreground such that only the upper portions of the turbine would be evident. Set in this context the turbine would not dominate and would result in a limited change in the view characteristics.	Medium as Coates Lane is an attractive rural lane	Low	Slight Adverse
Photomontage 5 - X	410m to the west	The turbine would again be a skyline feature appearing to be on	High as from	Low	Slight Adverse

428111 Y402247		the brow of a hill. The turbine would be viewed in its entirety too, however would be seen set between trees which provide the visual scale and with the distance it would not appear oppressive or result in a more than limited loss of openness.	Highfield Farm		

4.13 Therefore having regard to the above assessment, whilst there is some harm within the slight adverse category, this does not necessarily equate to unacceptable harm and this change in vista must be balanced against policy expectations and guidance encouraging renewable energy.

4.14 Due to the narrowness of the turbine and the relatively modest height in comparison with large scale commercial wind turbines, it is considered that main views would be contained to more local views from the immediate road network. There is unlikely to be any longer distant view of the turbine which would have a significant effect. This aids in ensuring that any harm is minimised and constrained to the local scale.

Cumulative Landscape Impact

4.15 The following image shows the commercial wind schemes in the broader area and it is clear that there is a significant distance to such schemes and that the proposals are unlikely therefore to have any real visual interaction which would result in any significant cumulative impact:

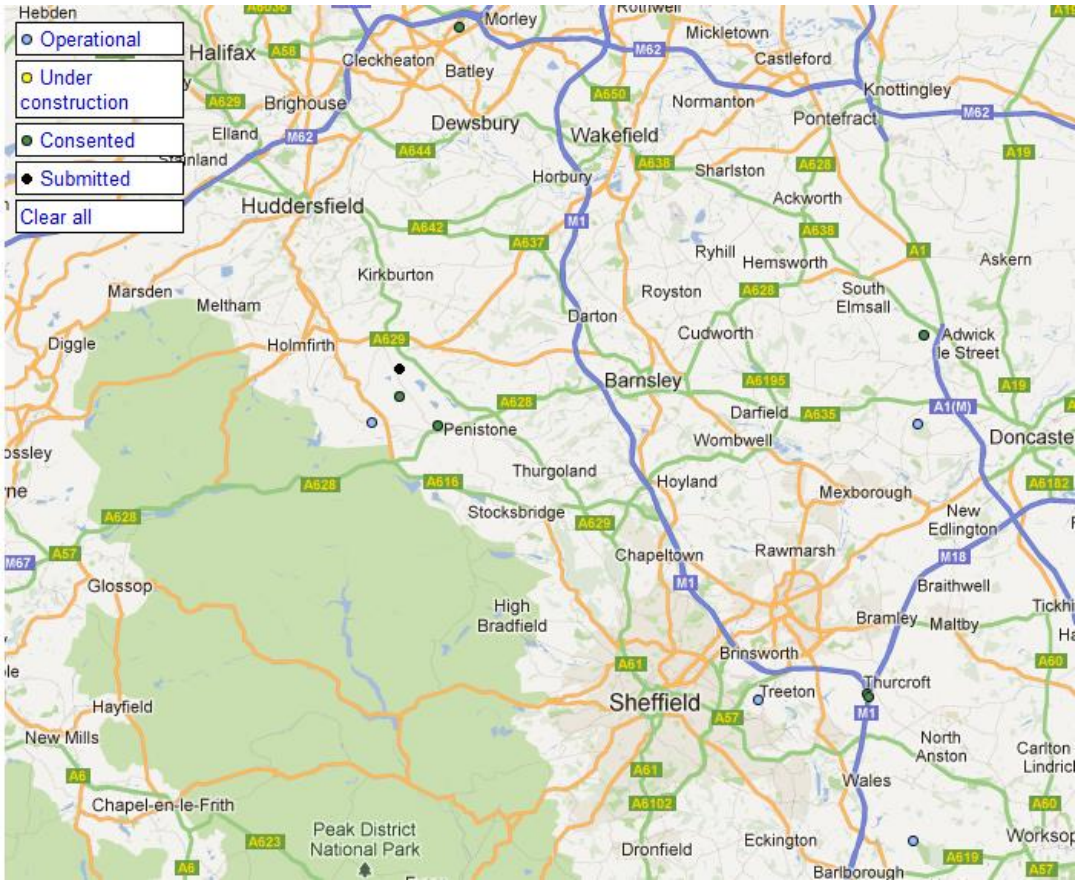

4.16 The applicants have had a wind turbine approved further to the east of the proposed turbine. The two would rarely be seen in the same visual context and this is underlined within the photomontages included within Appendix B which demonstrate that the proposed turbine would not be viewed in the same visual context as any other existing agricultural scale wind turbines and thus any cumulative visual and landscape effects are likely to be minimal. The cumulative effects are likely to be confined to sequential effects as people pass through the landscape particularly along the A629. But as a single turbine these effects are unlikely to be so impacting that the turbine would see significant cumulative effects.

4.17 Based on the above assessment the turbine would not significantly alter the character of the local landscape as previously defined, thus the general character of the landscape would be retained, albeit with the introduction of a visible turbine. When the visual impact is balanced against the positive benefits associated with the introduction of the renewable energy provision, it is considered that this application should be considered favourably and

can be accommodated without compromising the overriding characteristics of this landscape and the associated planning policies.

Neighbour Impact

Shadow Flicker

4.18 The nearest neighbouring property to the farm is Pule Hill Lodge, which sits at the start of the farm access track on Rag Lane and is located approximately 380m to the south east from the proposed siting of the wind turbine. Grants Farm to the west is the nearest neighbouring property to the turbine and would be approximately 335m away. Shadow flicker is defined as obstructions to light incurred when the blades of the wind turbine cause light pollution when sited in close proximity to buildings, typically to the west or east of the turbine. Shadow flicker has only been known to occur within 10 rotor diameters of a turbine 130 degrees either side of north. In this case, shadow flicker could only theoretically occur within 192m of the turbine and there are no properties within this distance. There is therefore no issue of residents being affected by shadow flicker at the site due to the location of the turbine and the distance with neighbouring properties.

Noise

4.19 The ETSU-R97 is a guidance note widely used by planners in assessing wind turbines and indicates that a noise limit for night time operation of 43DB(A) is acceptable. This limit is derived from the 35DB(A) sleep disturbance criteria referred to in Planning Policy Guidance.

4.20 The Noise Working Group recommends that day time lower fixed limits can be higher than this at 45 DB(A). They also state that consideration should be given to increasing the permissible margin above background where the occupier of the site has some financial involvement in the wind turbine, meaning that it can be acceptable to have higher noise readings where the applicant's property is the primary affected residence.

4.21 Attached with the application documents is a noise survey undertaken in relation to the Endurance E-3120 Wind Turbine according to IEC 61400-11 at East Ash Farm, Bradworthy, Devon to measure the sound power level and tonal characteristics. The apparent sound power level of the wind turbine was calculated over a range of wind speeds

from 3-12m/s together with the one third octave band levels for wind speeds of 6-8 m/s. It was not possible to calculate the 1/3 octave sound power levels above 8m/s due to the contrition of background noise. The tonal output from the Endurance E-3120 turbine has been assessed using the methodology prescribed by IEC 61400-11 for wind speeds of 6-10 m/s and has been determined to be not tonal, except at a wind speed of 6m/s where tones were identified. In the case of the siting point of the wind turbine, the nearest residential property is well over 335m from the wind turbine and therefore noise emissions are unlikely to present a concern in this case. This is underlined in the attached noise report.

Visual Impact from Neighbours

4.22 In terms of visual impact from neighbouring properties, the accompanying photomontages within Appendix B outlines how the proposed turbines would sit in the landscape. It is a well held planning principle that there is 'no right to a view' from individual residential properties over land in someone else's ownership. However, any development which dominates an outlook to an unreasonable degree in that it harms the amenity of residents could constitute an unacceptable impact. The nearest neighbouring property to the farm is Pule Hill Lodge, which sits at the start of the farm access track on Rag Lane and is located approximately 380m to the south east from the proposed siting of the wind turbine. This property has its front elevation facing southerly and so away from the direction of the wind turbine. Its rear elevation is more northerly facing and so would have views achievable from this elevation, though vegetation in the foreground would help somewhat. Grants Farm to the west is the nearest neighbouring property to the turbine and would be approximately 335m away. This property is angled slightly away from direct line of sight with the turbine such that whilst views maybe achievable from its south eastern elevation, the relationship and its position sat down below the level of the A629 would all ensure that the turbine would not appear oppressive. Beyond this the photomontage pack attached with Appendix B indicates that the scale of the turbine recedes with distance and would not appear unduly dominating from distances beyond 400m (photomontage 5). In this respect and at the distances involved the turbine is unlikely to harm the living conditions enjoyed by the occupants of these properties.

Electromagnetic Interference

4.23 The wind turbine's switch gear has been fully tested to ensure compliance with the UK standards, thus ensuring that the main source of electromagnetic interference from other wind turbines is avoided. The digital TV network in the UK is not affected by electromagnetic interference which was previously associated with analogue TV services and transmission stations. The scattering and disruption of signal is a rare occurrence in any event, associated with very large utility scale wind turbines and there have been no recorded instances of electromagnetic interference occurring from wind turbines less than 45m high. Consequently, this wind turbine is unlikely to cause any electromagnetic interference in the area.

Proximity to Airports and Flight Paths

4.24 This is a revised planning application submitted following the withdrawal of an earlier scheme for an Endurance turbine on a 36m hub which raised concerns from NATS. This revised application on a lower hub is aimed at overcoming the previous objection. Any consultation responses would of course be important in the determination of this application but it is worth noting that the previous applications for the Proven and Gaia did not see objections in respect of aviation. The map below shows indicative radar coverage at 40m.

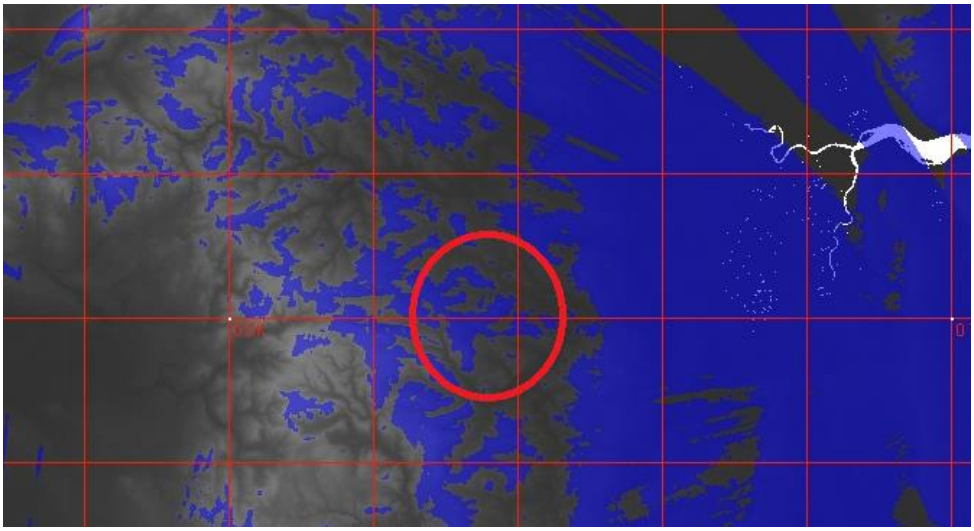

NATS Radar Map for 40m wind turbine tip height

4.25 Earthmill Ltd has also conducted preliminary research using the MOD online tool, which indicates that the installation is unlikely to be within an area where wind turbines would interfere with MOD radar. However, once again unfortunately the accuracy and detail of the plans is limited which makes it impossible to ascertain for sure and again, any consultation responses would of course be important in the determination of this application.

MOD Radar Map for 40m wind turbine tip height

4.26 The nearest commercial airport is at Doncaster, which is a significant distance away and amply sufficient to ensure that the turbine would not impact upon that turbine. The nearest airfield is an unlicensed airfield known as Crossland Moor and is indicated on the plan below. The application site is indicated by the blue circle.

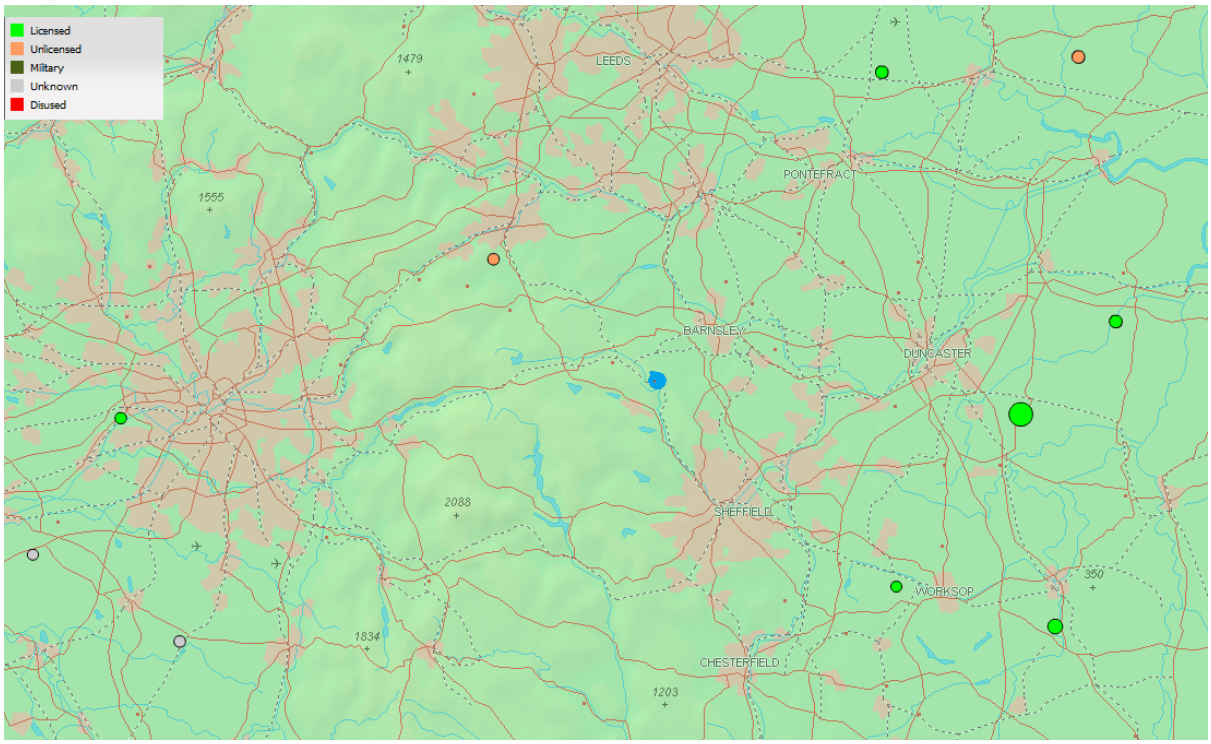

Map showing airfields in the vicinity

4.27 As you can see in the above plan, the application site is located a significant distance to any licensed (green circle) or unlicensed (orange circle) airfield and there are no military (black circles) airfields within the vicinity. Given the significant distance to any main or small air field and having regard to the approved turbine, it is considered that the proposals would have no impact on flight paths or the operations of airports in the wider region.

Ecological Issues

4.28 An appraisal of nearby designated sites has found the following within 10km of the application site:

Selected Local Nature Reserves

Site Code	Name	Area (Ha)
1009581	WHEATA WOODS	65.27
1009580	WHARNCLIFFE HEATH	48.95
1009900	WORSBOROUGH COUNTRY PARK	62.82
1008867	DEARNE VALLEY PARK	49.33
1009078	POTTER HOLES PLANTATION	8.66
1008884	ELSECAR RESERVOIR	13.64
1083118	TOWN END COMMON	8.43

Selected Special Areas of Conservation

Site Code	Name	Area (Ha)
UK0030280	SOUTH PENNINE MOORS	65025.5

Selected Special Protection Areas

Site Code	Name
UK9007021	PEAK DISTRICT MOORS (SOUTH PENNINE MOORS PHASE 1)

Selected Sites of Special Scientific Interest

Site Code	Name	Area (Ha)
1003966	LITTLE DON STREAM SECTION	1.01
1004074	PYE FLATTS MEADOWS	2.21
1002023	THE DARK PEAK	31823.79
1084115	SPRING MEADOWS, ALDERMAN'S HEAD & COW CROFT MEADOWS	16.83
1002361	CANYARDS HILLS	65.62
1004022	WHARNCLIFFE CRAGS	15.6

4.29 The nearest designated site of note is considered to be the South Pennine Moors due to its size and capacity to support significant number of breeding waders such as curlews which can be affected by wind turbine development. It should be noted that an earlier application (Application No. 2011/0470) for the deployment of a small-scale turbine at the site was approved by the council, demonstrating that the development is considered acceptable in relation to ecological values, in principle. The location of the A629 approximately 90m is likely to be such that the noise and disturbance associated with the traffic would reduce any

potential ecological linkages with the protected habitats. Any ecological impact is therefore likely to be associated with the habitats found within or adjacent to the application site only rather than nearby designated assets as highlighted above. The installation of the proposed wind turbine would result in no significant trees being removed due to the form and nature of the installation process and as such there would be no direct habitat loss.

4.30 Collision risk and disturbance displacement are therefore considered the two predominant effects likely to occur. Clearly with an additional individual turbine the potential for collision and disturbance with birdlife is reduced from a commercial wind farm. Different species groups vary in terms of susceptibility to collision, with larger birds such as raptors being particularly susceptible. The RSPB generally consider that smaller more agile birds such as sparrows or finches are better equipped to avoid collision with wind turbines. Given the habitats around the site and the location of the A629 it is considered that the smaller more agile farmland bird species found within hedgerows would be the more predominant of birdlife.

4.31 Taking into account the habitats on site, given the relatively low height of the turbine in comparison with large scale wind turbines and as this application relates to an isolated turbine rather than a wind farm, it is considered that the risk of bird collision would be minimal. Comparably, disturbance is likely to be contained to the micro scale around the turbine itself rather than from the wider area. This is underlined in the ecology report prepared by Naturally Wild.

4.32 Natural England has produced a Technical Information Note TIN051 in light of the Eurobats Agreement, entitled 'Bats and Onshore Wind Turbines'. This report summarises the potential impacts of wind energy developments on bats and TIN051 recommends that wind turbines are unlikely to affect bat populations where a 50m buffer is maintained from foraging habitat. In this location the most likely foraging area is likely to be the tree belt to the south east which is over 100m away. This wind turbine is positioned outside of the buffer zone required by Natural England and it is thus clear that the proposals would not result in any significant impact on possible bat populations. This is underlined in the ecology report prepared by Naturally Wild.

4.33 Both the RSPB and Natural England are generally supportive of wind turbines and the role they play in sustaining the country's energy demands. Naturally site specific conditions

must still be given due consideration and in this location it is considered that the provision of one individual wind turbine can be sensitively sited so as to ensure that the proposals would not result in any adverse impact on ecological issues.

Archaeological Implications

4.34 The proposals will involve some ground excavations when the foundations are laid and turbine installed, however, following a desktop appraisal there is little to suggest that the application site has any archaeological importance. The following archaeological remains are noted around Thurgoland:

- Post-Medieval to Industrial Period Cottages and Farmhouse, Thurgoland
- Iron Age or Romano-British House Platform, Thurgoland
- Iron Age or Romano-British House Platform, Thurgoland
- Iron Age or Romano-British House Platform, Thurgoland
- Iron Age or Romano-British House Platform, Thurgoland
- Old Brewhouse at Huthwaite Hall, Thurgoland
- 16th Century Farmhouse at Huthwaite Hall, Thurgoland
- New Mill, Thurgoland
- Post-Medieval Aisled Barn at Highfield Farm, Thurgoland
- Old Mill Workers Cottages, Thurgoland
- Medieval and Post-Medieval Pottery Finds, Thurgoland
- Copster Farmhouse, Thurgoland

4.35 None of these remains are located within or close to the application site and there is therefore no evidence to suggest that archaeological remains are likely to be an issue. Nevertheless, acknowledging the heritage associated with the listed farm house, if any findings are discovered during ground work appropriate steps as required will be taken to

ensure that no damage occurs. Should the council consider this to be needed to be controlled, this could be governed by a condition of consent.

Heritage Assets

4.36 As with any application, consideration should be given to any impact on the character of heritage assets, be they listed buildings or conservation areas. The nearby listed buildings (purple triangle) including the applicant's property Pull Hill Hall are identified in the following map:

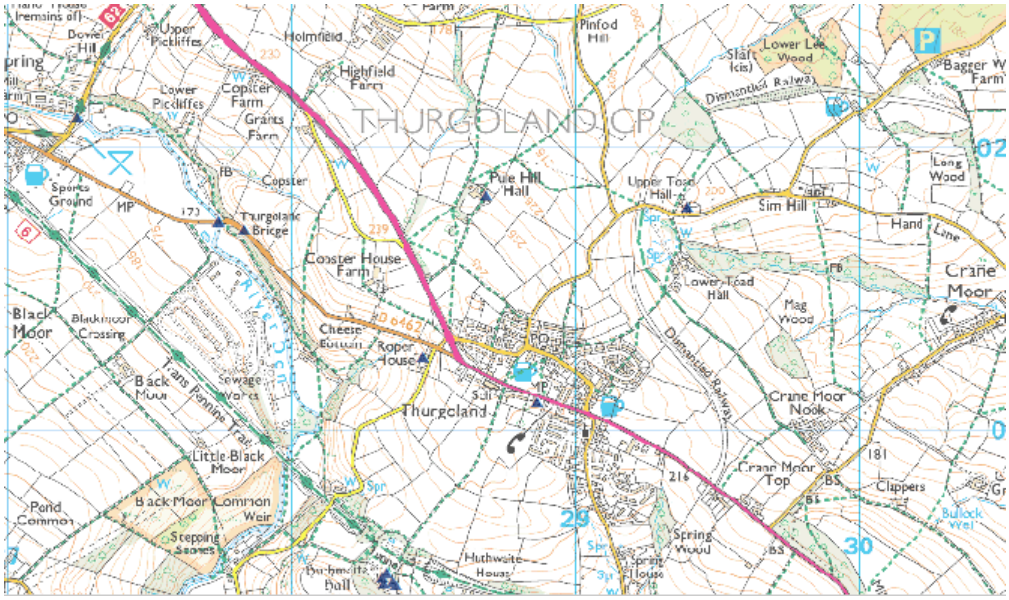

Map showing the Listed Buildings in the area

4.37 As you can see, there are listed buildings in the wider area, by far the majority of which are grade II listed buildings with only the one (Huthwaite Hall) grade II* and no grade I listed buildings. Given the limited height of the turbine and the distance to listed buildings it is considered that only the relationship with the setting of the applicant's property requires assessment.

4.38 As highlighted previously, this property is a grade II listed dwelling and was historically the manor house in Thurgoland. The Lords of the manor took the name 'Thurgoland', and in 1622 George Thurgoland sold Pule Hill Hall Farm to John Bamford. The manor house was then taken on by the Keresforths, a prominent Barnsley family, in 1671. The cottage attached to the main dwelling is understood to be erected at this time as it is dated 1671 in

the lintel above the doorway but appears to have been altered in the C18. It is the architectural detailing of the property and the historical significance of the relationship with Thurgoland which contributes to the building's significance. Such features include mullion windows, a round arched staircase window and the plaque with a shield support and helm. Modern farm buildings have been erected within the farm yard and these provide the main function of the current building group as a working farm.

4.39 The introduction of the wind turbine would be positioned approximately 250m to the west and while clearly visible from the farm yard (photomontage 1) and the A629 to the south (photomontage 2) at this distance the turbine would not be out of scale with or dominate the existing listed buildings due to the location of the modern utilitarian buildings positioned immediately to the west of the listed buildings. The function of this wind turbine would be readily understood by users of the A629 and in many respects the function of a wind turbine is comparable to the function of a farm through harnessing the natural resources to create energy, be it food or in the case of a wind turbine, electricity. In this respect the function complements the historic use of the land. It is therefore considered that the impact on the setting of this and other heritage assets would be acceptable.

Loss of Agricultural Land

4.40 The area of the application site is limited due to the diameter of the turbine and consequently it would have a no more than negligible impact on the agricultural use of the land which would for the main part continue whilst the turbine is in operation.

Installation of the Turbine and Access Arrangements

4.41 The temporary works required to install the turbine are limited. If granted we would be happy to accept a condition that any works to the land be reinstated following the installation of the turbine. In order to install the cabling for the turbine to connect to the grid some ground disturbance will be needed, however this will be temporary works, no trees would be removed and again the ground will be reinstated to its original condition upon laying the cable.

4.42 The installation of the single Endurance E-3120 wind turbine will take no more than 2 months. The principle stages for the installation are as follows:

1. Construction of foundation and concrete curing period

2. Cable trenching and installation

3. Tower assembly and erection

4. Installation of the blades onto the rotor

5. Installation of the nacelle on the tower section

4.43 A standard digger will be used to dig the foundations of the turbine. Cement for the foundations will be brought in using standard cement lorries. Transportation of the wind turbine to the site will usually be via two standard lorries – each capable of accommodating a standard 40ft shipping container. There will be no abnormally large loads and the volume of delivery and installation traffic will not be significantly greater than required for special transportation measures and in many respects comparable with the width and scale of agricultural vehicles that currently use the site. Two cranes are typically used to hoist the wind turbine into place. The application area that will be disturbed during construction of the base and tower will be in the region of 6m by 6m (36 square metres in total) within the land edged red.

4.44 The location and site map submitted with the application indicates the access route for the delivery of the turbine, tower and foundations with a dotted orange line. Access from public highway to the site will be via the A629. Then access to the turbine position itself will be across the field to the south from the existing field entrance point. This is shown in the map below with the dotted orange line and accompanying photo.

4.45 It will not be necessary to create a hard-core track as access to the turbine will be over the undisturbed field surface using temporary reinforcing cover sheets. These are removed completely once installation is complete leaving no trace. It should be noted that there is no requirement for regular vehicle access to the turbine site other than for delivery and installation of the foundations and the wind turbine itself. The installation will not take place until site conditions make it easy to use this route without any need for a permanent track across the field. The proposed site will not therefore require any changes or improvements to the local highways for access or maintenance. This is one of the real benefits of a turbine of this scale where no extra traffic will be generated as a result of the project, other than for the initial delivery of the equipment and an annual routine maintenance visit.

5.0 Conclusion

5.1 In assessing this application in relation to policy and environmental context, it is considered that the application should be granted for the following reasons:

- The proposed wind turbine would be positioned to the south west of the farmstead in a location where the visual intrusion would be minimised and the turbine seen against the context of maturing trees and telegraph poles.

- The proposed turbine would not be seen as an isolated feature within the countryside but would clearly relate to the tree belt and set within the agricultural land its function would be readily appreciated.

- It is acknowledged that under strict Green Belt guidance, a wind turbine is considered inappropriate development in principle, however, in line with recent appeal decisions and case law there are exceptional circumstances in the form of providing renewable energy and assisting the UK's commitment to addressing climate change which outweigh Green Belt planning policy.

- The scale and location of the wind turbine would be such that the impact on nearby residential properties would be negligible with any impact confined to a visual appreciation of its siting. This in its own would not constitute any material harm to living conditions and it is thus considered that the amenity of neighbouring properties would be maintained.

- There are no other material planning considerations that would outweigh the overriding benefits of this proposal in providing a renewable energy source and the long term environmental benefits this brings.

5.2 Having regard to the above and all other matters, it is considered that the proposed development meets the expectations of policies of the Development Plan and other policy guidance including specifically the provisions of the NPPF. It is thus felt that this application should be granted subject to reasonable and appropriate conditions.

APPENDIX A METHODOLOGY USED FOR ASSESSING VISUAL LANDSCAPE IMPACT

The process of assessing the impact of this application from a visual amenity perspective has been guided by the document 'Guidelines for Landscape and Visual Impact Assessment'(2002). To accompany the description of baseline and assessment information, a series of classifications have been applied to the landscape character of the site and each visual receptor. These act as a summary and place a defined value on; the sensitivity of the character area/visual receptor, the magnitude of change and the consequent significance of the effect of the development.

The sensitivity of existing Landscape Character/Visual Receptors is the degree to which landscape character or a visual receptor can accommodate change arising from a particular development, without a detrimental effect. It is dependent on its importance, quality, value and contribution and the degree to which it can be replaced or substituted. The sensitivity of landscape character/ a visual receptor is defined as being High/Medium/Low, where High is the most sensitive. For visual receptors and views the sensitivity will depend on the location and context of the viewpoint, the expectations and occupation or activity of the receptor and the importance of the view. The most important receptors are usually users of outdoor recreational facilities, where the interest may be focused on the landscape. Also, occupiers of residential properties where views may be affected by the turbine are considered important. Other receptors that have been included are people travelling through or past the affected landscape in cars, on trains or other transport routes. The magnitude of change to a landscape character area or visual receptor will be dependent upon the nature of the proposed development itself and its size, location, and individual forms and pattern in relation to the character of the proposed development site and the surrounding area. Magnitude of change is categorised using the terms Low, Moderate and High, which can be generally defined as:

- Low - a limited number of changes to any of the key elements/features/characteristics of the baseline landscape or views. This would equate to a discernable but non-material change to the landscape character or view;
- Moderate - a moderate number of changes to any of the key elements/features/characteristics of the baseline landscape or views. This would equate to a material change in the landscape character or view;

- High - a large number of changes to any of the key elements/features/characteristics of the baseline landscape or views. This would equate to a fundamental change in the landscape character or view.

For visual receptors the criteria adopted for classification of sensitivity and magnitude of impact are as follows:

Sensitivity:

- High sensitivity e.g. residential properties, Public Rights of Way and passive recreational activities, scenic drive;
- Medium sensitivity e.g. play areas, sporting and active recreational facilities, attractive rural lanes;
- Low sensitivity e.g. industry, general road users.

Views from faster roads (e.g. 'A' and 'B' class roads and motorways) are normally considered to be of low sensitivity to change due to the transitory nature of such views. Views from minor country lanes, which potentially have a higher recreational value, have been assessed as being of medium or high sensitivity.

Magnitude of Impact:

- High magnitude e.g. major change in view character;
- Medium magnitude e.g. moderate change in view character;
- Low magnitude e.g. minor change in view character;
- Negligible magnitude e.g. a development is visible but forms a barely perceptible component of the view

Due to access restrictions, the magnitude of effect on view character for all receptors, including residential property, is assessed on the basis of ground level views (e.g. from ground floor and garden level in the case of residential property).

An assessment of the significance of an impact can be derived from the combination of the 'sensitivity' of a landscape or visual receptor and the 'magnitude' of the impact. This has been interpreted as follows:

Sensitivity		**Magnitude**		**Significance**
High	+	High	=	Substantial
High	+	Medium	=	Moderate
High	+	Low	=	Slight
Medium	+	High	=	Moderate
Medium	+	Medium	=	Moderate
Medium	+	Low	=	Slight
Low	+	High	=	Moderate
Low	+	Medium	=	Slight
Low	+	Low	=	Slight

Impacts are described as being either beneficial or adverse.

Negligible impacts can be derived from high, medium or low sensitivity combined with negligible magnitude.

Landscape character is defined as a distinct and recognisable pattern of elements that occur consistently in a particular type of landscape. Patterns in the landscape, activity or tranquillity, heritage and cultural associations, vegetation, land use and connectivity combine together to create landscape character. It is important this is considered so a full understanding of the site and its surroundings can be achieved. England has been divided into areas with similar landscape character, which are called National Character Areas (NCAs) and the characteristics of the application site are considered within this application.

An assessment has been made of the visual impact from key settlements and public vantage points around the site. A table has been prepared which demonstrates the envisaged impact from key areas around the site of the proposed turbine.