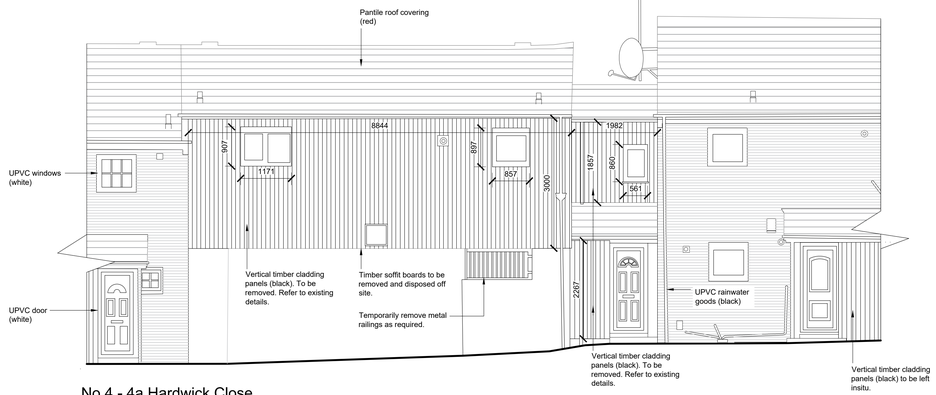

No.4 - 4a Hardwick Close
Existing Front Elevation (A)
Scale 1:50

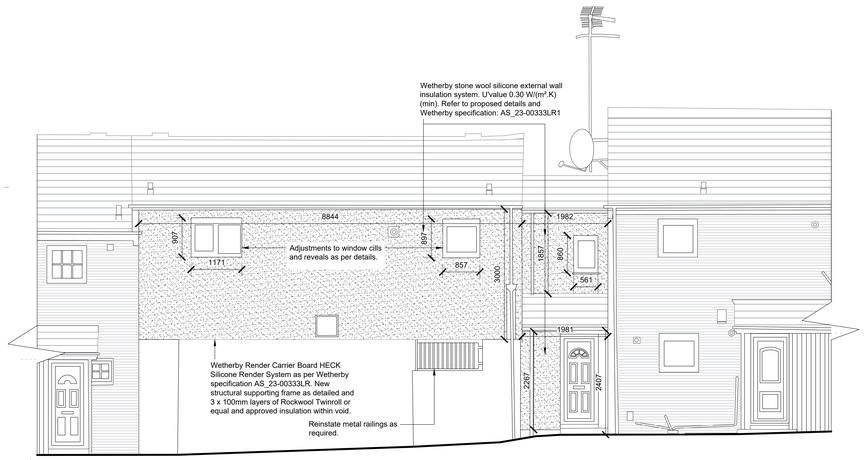

No.4 -4a Hardwick Close
Proposed Front Elevation (A)
Scale 1:50

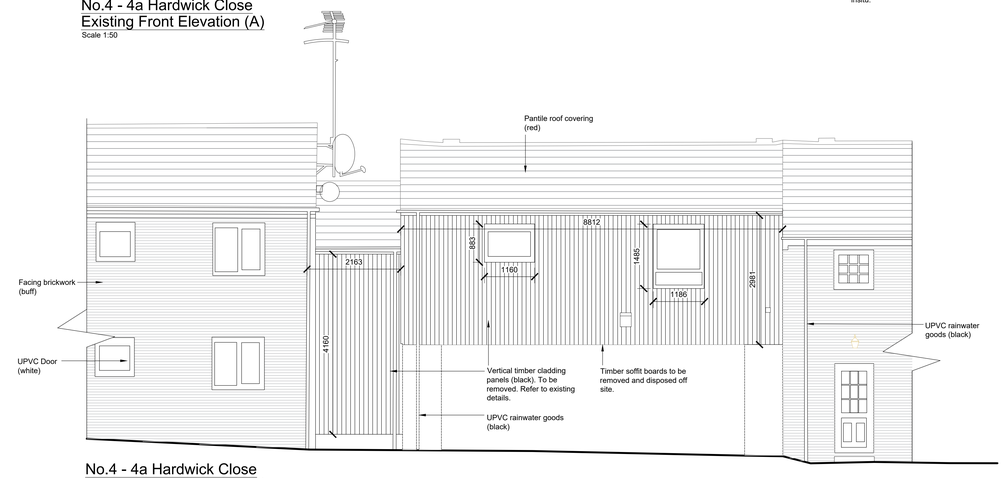

No.4 - 4a Hardwick Close
Existing Rear Elevation (B)
Scale 1:50

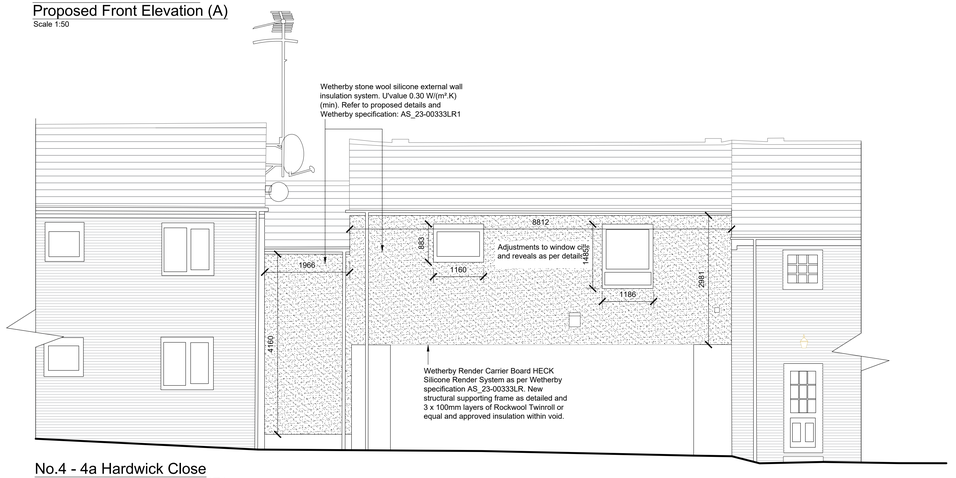

No.4 - 4a Hardwick Close
Proposed Rear Elevation (B)
Scale 1:50

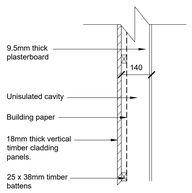

Typical Existing Section Through External Wall
Scale 1:10

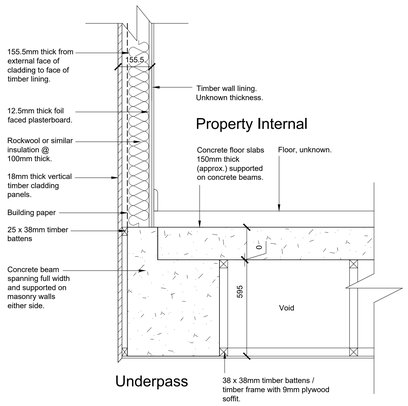

Typical Existing Section Through External Wall & Underpass
Scale 1:10

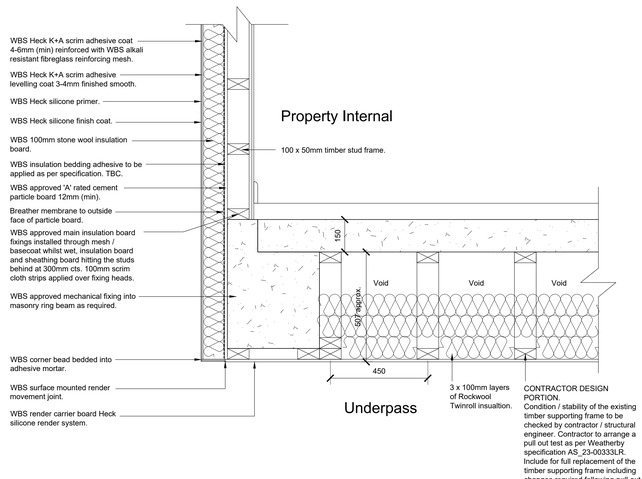

Typical Proposed Section Through External Wall & Underpass
Scale 1:10

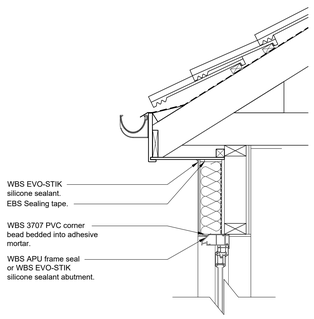

Typical Proposed Section Through Window Head / Soffit Detail
Scale 1:10

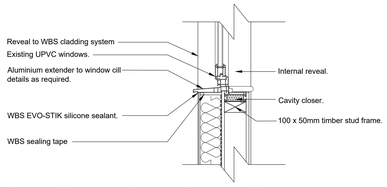

Typical Proposed Section Through Window Cill Detail
Scale 1:10

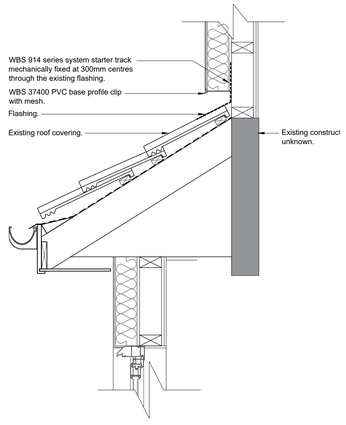

Typical Proposed Roof Junction Detail
Scale 1:10

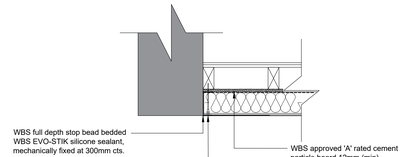

Typical Proposed Party Wall Detail (Plan)
Scale 1:10

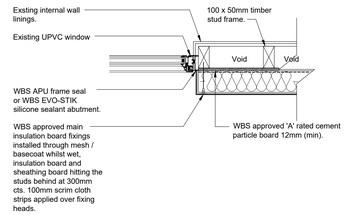

Typical Proposed Window Jamb Detail (Plan)
Scale 1:10

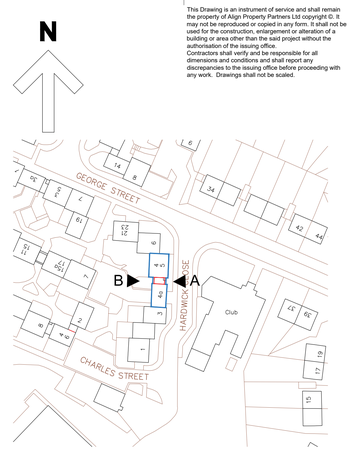

Elevation Reference Plan
Scale 1:100

Key:

Property outline

Circulation space and area of replacement cladding to front and rear elevations. Including new soffit details

General Notes:

Drawings to be read in conjunction with the Wetherby Building Systems Ltd (WBS) project specification and detail drawings, Ref: AS_23-00333LR.

All fixings, joints / abutments and associated details to be as per WBS Specification vand associated details. Proposed WBS Stone Wool Silicone External Wall Insulation System and Render Carrier Board HECK Silicone Render System (Soffits) to be installed by a WBS approved contractor.

Proposed cladding system to provide a minimum Fire Performance 'Class A1' (BS EN 13501-1:2002) non-combustible.

Proposed cladding system to provide a minimum U' value 0.30 W / (m².K) in accordance with Building Regulations Approved Document Part L. Refer to WBS UValue calculation document.

Contractor Design Portion

Condition and the stability of the existing timber supporting frame to be checked by the contractor and their structural engineer. Contractor to arrange a pull out test as per the requirements of the Weatherby specification AS_23-00333LR. Contractor to include for the full replacement of the timber supporting frame including changes as required following the pull out test. Fixing types as per Weatherby specification; WHX 60mm screws - minimum 35 fixings per board subject to pull out test.

Contractor responsible for temporarily isolating and removing any fixture / fittings, services and lighting fixed to the cladding and reinstalling on completion.

Notes

This Drawing is an instrument of service and shall remain the property of Align Property Partners Ltd copyright ©. It may not be reproduced or copied in any form. It shall not be used for the construction, enlargement or alteration of a building or area other than the said project without the authorisation of the issuing office.
Contractors shall verify and be responsible for all dimensions and conditions and shall report any discrepancies to the issuing office before proceeding with any work. Drawings shall not be scaled.

P1	Planning	WRB 06.12.23	NRL 06.12.23	SAS 06.12.23
Ver:	Details	Author & Date	Checked & Date	Approv'd & Date

align PROPERTY PARTNERS
White Rose House (2nd Floor), Northallerton Business Park, Thurston Road, Northallerton, DL6 2NA Tel: 01609 797373

Client: Barnsley Metropolitan Borough Council

Project name: Cladding Replacements (Phase 1) Worsbrough

Drawing Title: No.4 - 4a Hardwick Close Elevations and Details

Purpose: Planning

Scale	Drawn	Checked	Approved
1:10 1:50	WRB	NRL	SAS
Original Size	Date	Date	Date
A0	06.12.23	06.12.23	06.12.23

Drawing Number: BC2202 22-APP-XX-XX-DR-B-000220 | Version: P1

0 100 500 1000 mm
SCALE 1 : 10

0 1000 2000 3000 4000 5000 mm
SCALE 1 : 50

Align Property Partners Ltd copyright ©