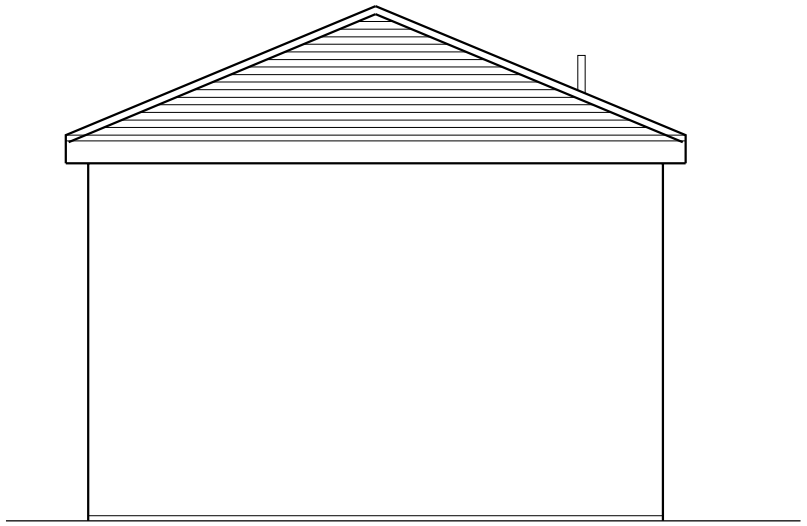

L 28 North West Elevation

L 29 South West Elevation

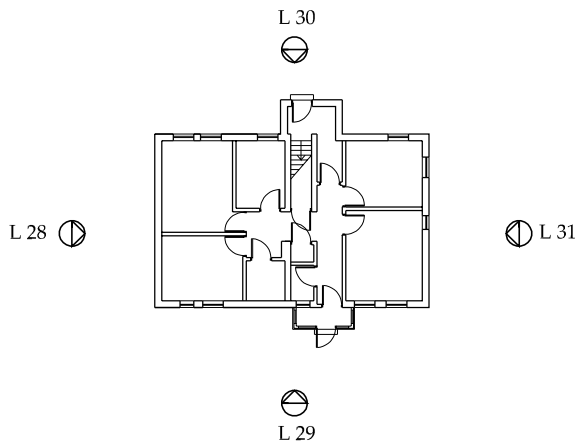

L 30 North East Elevation

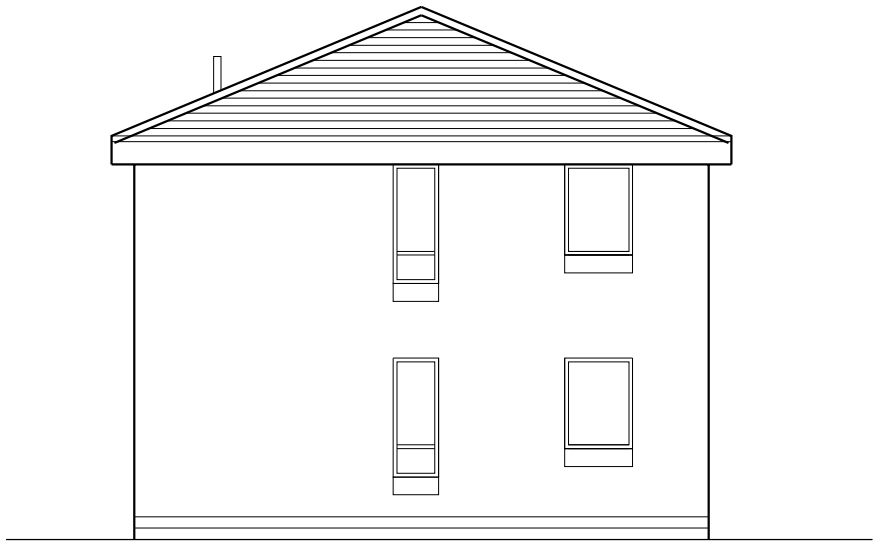

L31 South East Elevation

0 1 2 3 4 5

Scale

Revision	Description	Date

Do not scale from this drawing.
Any errors, omissions and discrepancies to be reported to the Architects as soon as they are discovered and instruction sought before proceeding.

Drawing Status:	PLANNING

ALSTON MURPHY ASSOCIATES
architects
planning supervisors

57 Grainger Street
Newcastle upon Tyne
NE1 5JE

Tel: 0191 230 2930
Fax: 0191 221 0459
mail@alstonmurphy.com

Mapplewell Care Home
Barnsley

Proposed Offices
Elevations

Scale: 1:100 @ A3 Date: June '11

Drawn: OC Auth:

1535 L [0] 28-31