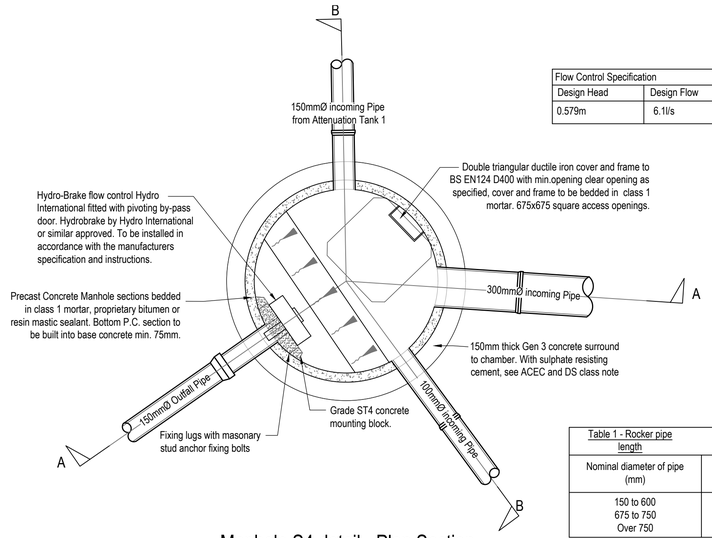

Manhole S4 detail - Plan Section

Scale 1:25

Flow Control Specification				
Design Head	Design Flow	Hydrobrake Specification	Min. Sump Depth	Min. Sump Width
0.579m	6.1l/s	SHE-0121-6100-0579-6100	310mm	260mm

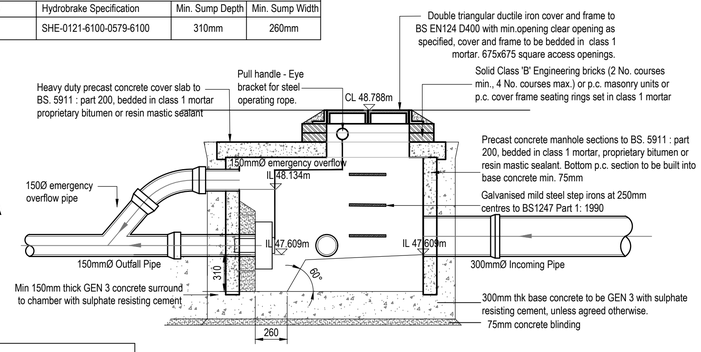

Manhole S4 detail - Section A-A

Scale 1:25

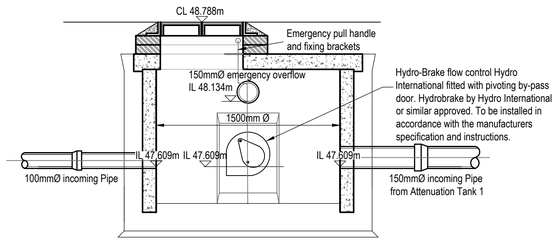

Manhole S4 detail - Section B-B

Scale 1:25

Table 1 - Rocker pipe length	
Nominal diameter of pipe (mm)	Effective length (m)
150 to 600	0.6
675 to 750	1.0
Over 750	1.25

NOTE: Flexible pipe joint should be placed as close to the chamber as practicable.

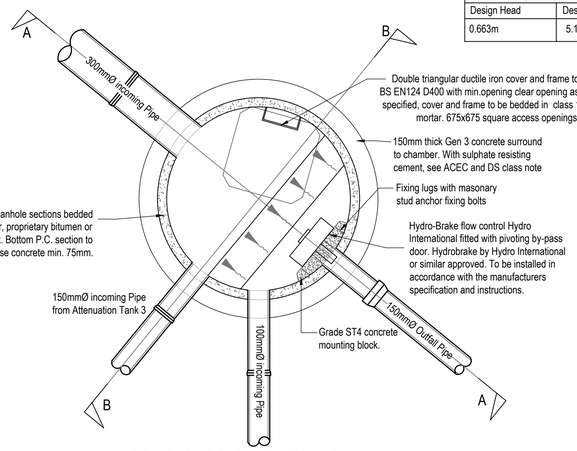

Manhole S8 detail - Plan Section

Scale 1:25

Flow Control Specification				
Design Head	Design Flow	Hydrobrake Specification	Min. Sump Depth	Min. Sump Width
0.663m	5.1l/s	SHE-0111-5100-0663-5100	315mm	240mm

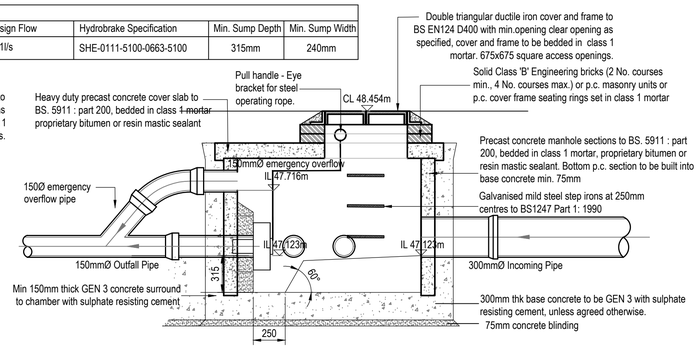

Manhole S8 detail - Section A-A

Scale 1:25

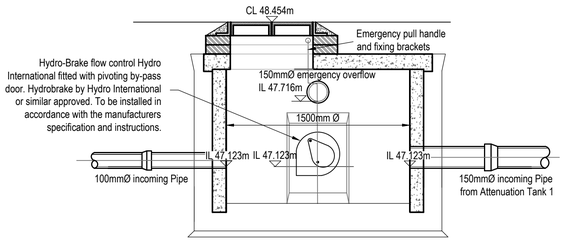

Manhole S8 detail - Section B-B

Scale 1:25

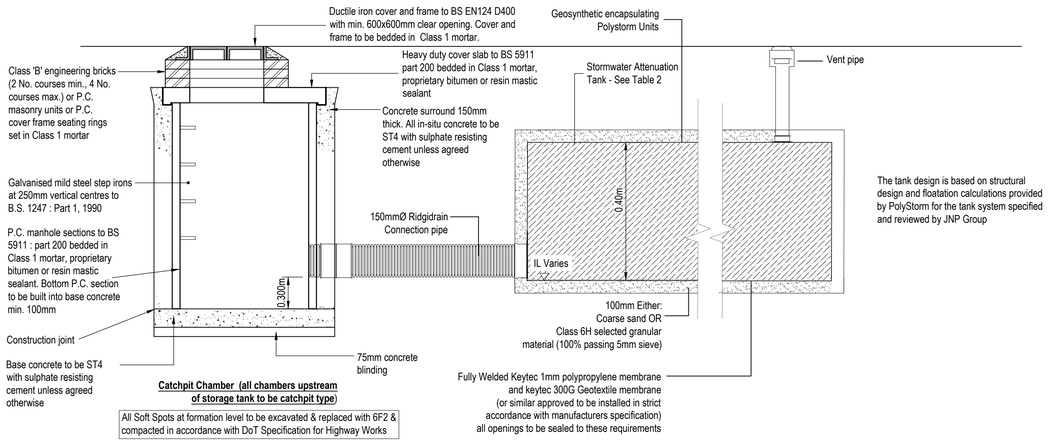

The tank design is based on structural design and floatation calculations provided by PolyStorm for the tank system specified and reviewed by JNP Group

Typical section through Attenuation Tank

Not toscale

Table 2 - Attenuation Tanks Breakdown

Name	Construction	Size	CL (Min)	Tank Base Level	Tank Height
Attenuation Tank 1	1 Layer of Polystorm PSM1A Units	29.5m^2	48.811m	47.610m	0.40m
Attenuation Tank 2	1 Layer of Polystorm PSM1A Units	9.5m^2	48.799m	47.650m	0.40m
Attenuation Tank 3	1 Layer of Polystorm PSM1A Units	19.0m^2	48.395m	47.150m	0.40m
Attenuation Tank 4	1 Layer of Polystorm PSM1A Units	10.0m^2	48.568m	47.200m	0.40m

General Notes

1. Where this drawing has been issued in electronic .dwg format, it has been done so in good faith. JNP Group do not take any responsibility for any inaccuracies in the electronic data, which should be checked against the paper (or .pdf) drawing issue. Any apparent discrepancies should be immediately reported to JNP Group. The electronic .dwg file should not be assumed to be to scale and should not be used for 'overlaying', setting out or checking of any third party information. All dimensions should be taken from the paper (or .pdf) version of the drawing. Electronic drawings may contain third party information. JNP Group take no responsibility for this information, which should be checked against the originators paper drawing(s).
2. All dimensions are millimetres (mm), and levels are in metres (m) unless noted otherwise and should be checked on site prior to construction/fabrication.
3. Do not scale from this drawing. Only figured dimensions are to be relied upon. Don't hesitate to get in touch with JNP Group if additional information is required.
4. Any discrepancies between drawings of different scales and between drawings and specifications, where appropriate, to be reported to JNP Group for decision.
5. Copyright reserved. This drawing may only be used for The Client and location specified in the title block. It may not be copied or disclosed to any third party without the prior written consent of JNP Group.
6. This drawing should only be used for construction if the drawing status is "A4 - Approved/Stage Complete". JNP Group takes no responsibility for construction works undertaken to drawings that are not marked with this status.

Health & Safety Note

The details on this drawing have been prepared on the assumption that a competent contractor will be carrying out the works. If the contractor(s) considers that there is insufficient Health and Safety information on this drawing, this should immediately be brought to the attention of the designer.

Rev.	Date	Description	Drn / Chk'd / App'd
P02	18/06/2025	Flow Control Details amended to suit 1 in 1 Year storm event	AG / AMc / AMc
P01	31/01/2025	First Issue	AG / AMc / AMc

Suitability:
S4 - Suitable for Stage Approval

JNP GROUP
CONSULTING ENGINEERS
● Amersham ● Brighouse ● Bristol ● Glasgow ● Hartlepool ● Sheffield ● Warwick
www.jnpgroup.co.uk

Client:
BKUK Group Ltd

Job:
Burger King
Barnsley

Title:
Drainage Construction Details

Classification: FI_60_20
Scale @ A1: As Shown

Project - Originator - Volume/System - Level/Location - Type - Discipline - Number
M44627-JNP-90-XX-DR-C-3000
Document/Drawing Number
Revision: P02

© Copyright JNP Group Ltd. 2020
JNP Group Internal Project Number: H01234