BOSCH
Invented for life

AutoDome 300 Series PTZ Camera System

- **High-speed PTZ dome**
- **Fully interchangeable CPUs, cameras, housings, communications, and mounts**
- **Choice of 540 TVL 36x day/night night camera with 128x wide dynamic range or 26x and 18x day/night cameras**
- **Optional hybrid operation provides simultaneous analog (coax) and IP connectivity**
- **Advanced privacy masking**
- **Advanced alarm control with rules engine**
- **UTP transmission standard on all analog models**
- **Cable compensation extends cabling distances**
- **Multi-protocol capable**
- **Three-year warranty**

Bosch's AutoDome modular camera system is a revolutionary new concept in dome cameras. More than just a series of cameras, it's a dome platform built around a system of intelligent, interchangeable modules that allow you to update camera functionality quickly and cost-effectively. Using common components lets you install a basic camera system today and migrate to a more advanced version tomorrow – without having to replace the entire dome, thus protecting your initial investment.

Interchangeable modules

The entire AutoDome system is based on five interchangeable modules: the CPU, camera, housing, communications, and power supply. Simply swap one of AutoDome's interchangeable modules and quickly upgrade from analog to IP, color to day/night, or add motion detection. Never before have you had the ability to adapt a security system to your changing needs this quickly or inexpensively.

By using the same housing components, all installations have a consistent look, and observers have no idea which type of camera (if any) is watching over them. This unique, modular design also gives you the flexibility to move cameras between different housings when special coverage is needed, or as site plan requirements change.

For example, an 18x PTZ camera over a specific area could easily be "hot-swapped" to a 26x or 36x day/night without removing the power.

Migrating from a basic dome to one with advanced features such as AutoTrack II intelligent tracking can be done quickly and easily, without requiring dome removal or rewiring. AutoDome's Ethernet communications module allows you to add IP functionality while maintaining connectivity to existing analog inputs and outputs.

300 Series highlights

The AutoDome 300 Series includes support for 18x, 26x, and the industry-leading 36x day/night PTZ cameras, and several advanced features – including an alarm management "rules" engine and privacy masking.

The AutoDome 300 Series supports a variety of standard and optional video and data transmission methods, including Bilinx (over coax and UTP), fiber, and even TCP/IP over Ethernet. Remote control, configuration, and firmware updates can also be performed over these cables, offering you unparalleled control of your cameras. Cable compensation provides extended coaxial and UTP distance runs while preventing the image quality degradation caused by signal losses from long cable lengths.

The optional IP Communications Module has hybrid functionality to protect your current analog technology investment while providing a clear and stable migration path to fully digital, IP-based solutions. This allows you to move to IP video at your own pace – all at once or one camera at a time. And since all AutoDome modules are completely interchangeable, there is no need to replace expensive components (e.g., cameras) or labor-intensive components (e.g., mounts and housings).

Functions

The following are some of the features that make the AutoDome 300 Series the most flexible PTZ dome camera systems in the security industry.

High-performance PTZ day/night cameras

Image control and quality are integral aspects of any PTZ dome system, and the AutoDome delivers. The 300 Series is available with a choice of 18x, 26x, or an industry-leading 36x optical zoom lens, and all 300 Series systems offer a full 12x digital zoom. The 18x and 26x cameras provide 470 TVL (NTSC) or 480 TVL (PAL), and the 36x camera provides a full 540 TVL of horizontal resolution for outstanding clarity and image detail. The 36x camera also incorporates technology that dramatically improves the dynamic range by 128 times. Also known as WDR (wide-dynamic range), it results in clear image reproduction in extreme high-contrast environments.

The AutoScaling (proportional zoom) and AutoPivot (automatically rotates and flips the camera) features ensure optimal control.

Day/night capabilities and outstanding sensitivity make 300 Series cameras exceptional performers in all lighting conditions. In low light, these cameras automatically switch from color to monochrome by removing the IR filter to boost infrared illumination sensitivity, while maintaining superior image quality. For operation in the darkest conditions, the SensUp control feature automatically extends the shutter speed to as much as one second. This increases sensitivity by more than **50** times.

With super-quick, 360° per-second pan and tilt speeds, the AutoDome 300 Series outperforms other domes in its class. The 300 Series supports 99 pre-positions and two styles of guard tours: preset and record/playback. The preset tour can handle up to 99 pre-positions with a configurable dwell time between pre-positions; the order and frequency with which each preset is visited can be customized. The AutoDome 300 Series also provides support for two recorded tours, which have a combined duration of 15 minutes of movement. These are recorded macros of an operator's movements, including pan, tilt, and zoom activities, and can be played back continuously.

Supported menu languages include: English, French, German, Spanish, Portuguese, Italian, Dutch, and Polish.

Alarm management

The AutoDome 300 Series takes alarm handling to new levels of flexibility and power.

Inputs and outputs

The AutoDome 300 Series can handle seven alarm inputs: two of these are analog inputs that can be programmed for EOLR (End-of-Line Resistor) supervision whenever true security applications require it. These inputs enable the dome to "sense" if the contact is opened or closed *and* whether the wire has been tampered with (either by being cut or shorted). In addition, the AutoDome 300 Series supports four outputs: one relay rated at two amps and three additional open collectors for driving external devices. Each can be programmed individually.

Advanced alarm control

This new concept in flexibility goes beyond simple alarm handling. Advanced alarm control uses sophisticated rules-based logic to determine how to manage alarms. In its most basic form, a "rule" could define which input(s) should activate which output(s). In a more complex form, inputs and outputs can be combined with pre-defined or user-specified keyboard commands to perform advanced dome functions. There is virtually no limit to the number of combinations that you can program, making the standard software in the dome ready for any application.

Superior privacy masking

The AutoDome 300 Series allows for a total of 24 individual privacy masks, with up to eight displayed in the same scene. Unlike conventional privacy masks, these can each be programmed with three, four, or even five corners to cover more complex shapes. As the camera is zoomed each mask changes size smoothly and quickly ensuring that the covered object cannot be seen. You also have a choice of colors: black, white, and blurred. Blurred comes in handy when privacy is an issue, but determining the presence of motion is still required.

Optional hybrid analog/IP operation

AutoDomes equipped with the optional TCP/IP Communications Module use an advanced H.264 encoder to create DVD-quality streaming video across a local or a wide area network, and can simultaneously stream CVBS video via coaxial cabling to support existing analog equipment. Network video streams are sent over IP networks and can be viewed with the Bosch Divar XF Digital Video Recorder, or on a PC running VIDOS video management software. Alternatively, a Bosch IP video

decoder can be used to display the video on an analog CVBS or VGA monitor. For maximum accessibility, the video can be viewed using a web browser.

Tri-streaming video

Bosch's innovative tri-streaming feature enables AutoDomes equipped with the optional IP communications module to generate independent streams simultaneously. This feature allows you to stream high-quality images for live viewing while recording at a reduced frame rate, and at the same time, stream images to a remote PDA device.

Unsurpassed reliability

All housings feature recessed screws and latches for increased tamper resistance.

AutoDome pendant housings (indoor and outdoor) are rated to provide IP 66 protection. In addition, the pendant housings come equipped with a low-impact, high-resolution acrylic bubble for enhanced image clarity

AutoDome in-ceiling housings provide IP 54 protection and are rated IK 8 (IEC 62262). These housings feature an impact-resistant polycarbonate Rugged Bubble to protect your camera from vandalism. The Rugged Bubble can withstand impacts equivalent to a 4.5 kg (10 lb) weight dropped from a height of 3 m (10 ft).

Outdoor EnviroDome housings provide an operating temperature range down to -40°C (-40°F). The optional "XT" extreme temperature kit allows an AutoDome to operate in temperatures down to -60°C (-76°F), ensuring reliable operation in even the harshest environments.

The Pressurized Environmental Housing is rated to provide IP 67 protection for a VG4 Series AutoDome® Modular Camera System from the elements, both natural and manmade. It is the ideal surveillance solution for applications that require frequent wash-down, including traffic, transit, bridges, tunnels and coastal installations where salt, moisture, dust, insects and fumes threaten the long-term operation of the camera.

Ease of installation and servicing

Bosch's innovative software, the Configuration Tool for Imaging Devices (CTFID), allows operators or technicians to control the PTZ, change camera settings, and even update firmware from virtually anywhere without need for additional wiring. For the new Ethernet versions, an embedded Web server lets the installer access all the user settings, make camera adjustments, and update firmware via a standard Web browser.

AutoDome's innovative design simplifies installation and servicing. AutoDome reduces maintenance costs because you can replace individual modules instead of entire camera assemblies. Simply pop out the old module and slide in the new: it's almost as easy as changing a light bulb. All tethers have been replaced with hinges, making installation and servicing safer and easier. You can even access the built-in power supply without taking down the dome.

The AutoDome 300 Series has advanced built-in diagnostics to simplify service and minimize downtime. Using the On Screen Display (OSD), a technician can quickly and easily check critical parameters (such as internal temperature and input voltage level) to verify that the dome is functioning within acceptable operating limits. If video is not present, a local inspection of three diagnostic LEDs at the camera site can identify the presence of video and control data.

Feature Comparison Matrix

The following table provides an overview of the AutoDome camera family and its available features:

Standard Features	AutoDome 100 Series	AutoDome 200 Series	AutoDome 300 Series	AutoDome 500i Series
Interchangeable Modules	●	●	●	●
High Speed PTZ		●	●	●
Preset Shots		64	99	99
Preset Tour		●	●	●
Guard Tour			●	●
Alarm Inputs			7/4	7/4
High Resolution Camera	●	●	●	●
Day/Night Operation	●		●	●
IR Sensitive	●		●	●
SensUp Extended Sensitivity	●		●	●
UTP/Coax Transmission	●	●	●	●
Hybrid Analog/IP Connectivity	●	●	●	●
Bilinx Remote Configuration*	●	●	●	●
Cable Compensation			●	●
Hot-Swap Camera Modules	●	●	●	●
Ruggedized, Vandal-Resistant Enclosure	●	●	●	●

Advanced Features				
AutoTrack II Motion Tracking				●
Video Motion Detection				●
Image Stabilization				●
Privacy Masking and Sector Blanking			●	●
Advanced Alarm Control			●	●

*Compatible over Coax and UTP transmission only. Remote configuration over IP via web interface.

Certifications and Approvals

Region	Certification	
Europe	CE	VG4-1ab-cdefgh, VG4-2ab-cdefgh, VG4-3ab-cdefgh, VG4-5ab-cdefgh, VG4-A-PAxx, VG4-A-PSUxx EMC Directive, Low-Voltage Directive
Electromagnetic Compatibility (EMC)	Complies with FCC Part 15, ICES-003, and CE regulations, including EN50130-4 and EN50121-4	
Product Safety	Complies with CE regulations, UL, CSA, EN, and IEC Standards	

Installation/Configuration Notes

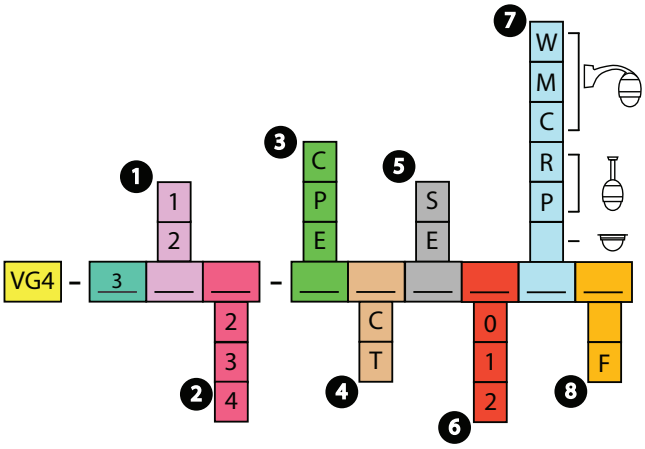

1 Video Format

1 PTZ PAL

2 PTZ NTSC

2 Camera Type

2 18x Day/Night PTZ

3 26x Day/Night PTZ

4 36x Day/Night PTZ

3 Enclosure

C In-ceiling[2]

P Indoor Pendant

E Outdoor Pendant

4 Bubble

C Clear

T Tinted

5 Communications

S Standard Analog (Coax/UTP)

E Ethernet (TCP/IP)

6 Power[5]

0 24 VAC[1]

1 120 VAC

2 230 VAC

7 Mount

W Wall

M Mast

C Corner

R Roof[4]

P Pipe

8 Fiber Optics

_ No Fiber

F Fiber[3]

1 No transformer included. Customer must supply an approved 24 VAC limited power supply (VG4-A-PSUx or equivalent).

2 Recessed in-ceiling housing units do not require kit options for reference numbers 6, 7, or 8.

3 Fiber optic option is multi-mode with biphase. Requires LTC 4629 at the system.

4 Roof mount mounts to vertical Parapet. For flat roof installation, order an additional LTC 9230/01 Flat Roof Adapter Plate.

5 Optional trim skirt available as a separate purchase.

Technical Specifications

Camera 36x Day/Night

Imager	1/4 in. Exview HAD CCD	
	(752 x 582 PAL)/(768 x 494 NTSC)	
Lens	36x Zoom (3.4 –122.4 mm) F1.6 to F4.5	
Focus	Automatic with manual override	
Iris	Automatic with manual override	
Field of View	1.7° to 57.8°	
Video Output	1.0 Vp-p, 75 Ohm	
Gain Control	Off/Auto (with adjustable limit)	
Synchronization	Line-Lock (–120° to 120° vertical phase adjust) or internal crystal	
Aperture Correction	Horizontal and vertical	
Digital Zoom	12x	
Horizontal Resolution	540 TVL (NTSC, PAL) typical	
Sensitivity (typical) [6]	**30 IRE**	**50 IRE**
Day Mode		
SensUp Off	0.66 lx	1.4 lx
SensUp On (15x)	0.033 lx	0.083 lx
Night Mode		
SensUp Off	0.166 lx	0.33 lx
SensUp On (15x)	0.0065 lx	0.0164 lx
Electronic Shutter Speed (AES)	1 to 1/10,000	
SNR	>50 dB	
White Balance	2000 K to 10,000 K	

6 F1.6, 1/60 (1/50) shutter, max AGC.

Camera 26x Day/Night

Imager	1/4 in. Exview HAD CCD
	(752 x 582 PAL)/(768 x 494 NTSC)
Lens	26x Zoom (3.5–91.0 mm) F1.6 to F3.8
Focus	Automatic, with manual override
Iris	Automatic, with manual override
Field of View	2.3° to 55°
Video Output	1.0 Vp-p, 75 Ohm

Gain Control	Off/Auto (with adjustable limit)	
Synchronization	Line-Lock (–120° to 120° vertical phase adjust) or internal crystal	
Aperture Correction	Horizontal and vertical	
Digital Zoom	12x	
Horizontal Resolution	NTSC: 470 TVL, typical PAL: 480 TVL, typical	
Sensitivity (typical)[7]	**30 IRE**	**50 IRE**
Day Mode		
SensUp Off	0.5 lx	1.0 lx
SensUp On (15x)	0.0052 lx	0.013 lx
Night Mode		
SensUp Off	0.10 lx	0.26 lx
SensUp On (15x)	0.0013 lx	0.0026 lx
Electronic Shutter Speed (AES)	1 to 1/10,000	
SNR	>50 dB	
White Balance	2000 K to 10,000 K	

7 F1.6, 1/60 (1/50) shutter, max AGC.

Camera 18x Day/Night

Imager	1/4 in. Exview HAD CCD	
	(752 x 582 PAL)/(768 x 494 NTSC)	
Lens	18x Zoom (4.1–73.8 mm) F1.4 to F3.0	
Focus	Automatic with manual override	
Iris	Automatic with manual override	
Field of View	2.7° to 48°	
Video Output	1.0 Vp-p, 75 Ohm	
Gain Control	Off/Auto (with adjustable limit)	
Synchronization	Line-Lock (–120° to 120° vertical phase adjust) or internal crystal	
Aperture Correction	Horizontal and vertical	
Digital Zoom	12x	
Horizontal Resolution	NTSC: 470 TVL, typical PAL: 480 TVL, typical	
Sensitivity (typical)[8]	**30 IRE**	**50 IRE**
Day Mode		
SensUp Off	0.4 lx	0.7 lx
SensUp On (15x)	0.0041 lx	0.0082 lx
Night Mode		
SensUp Off	0.05 lx	0.17 lx
SensUp On (15x)	0.0007 lx	0.0013 lx
Electronic Shutter Speed (AES)	1 to 1/10,000	
SNR	>50 dB	
White Balance	2000 K to 10,000 K	

8 F1.4, 1/60 (1/50) shutter, max AGC.

Mechanical/Electrical

Model	**In-Ceiling**	**Indoor Pendant**	**EnviroDome®**
Weight	2.66 kg (5.86 lb)	2.88 kg (6.3 lb)	3.32 kg (7.3 lb)
Pan Range	360° cont.	360° cont.	360° cont.
Tilt Angle	1° above horizon	18° above horizon	18° above horizon
Variable Speed	0.1°/s-120°/s	0.1°/s-120°/s	0.1°/s-120°/s
Pre-position Speed	Pan: 360°/s Tilt: 100°/s	Pan: 360°/s Tilt: 100°/s	Pan: 360°/s Tilt: 100°/s
Preset Accuracy	± 0.1° typ.	± 0.1° typ.	± 0.1° typ.
Power	21-30 VAC 50/60 Hz	21-30 VAC 50/60 Hz	21-30 VAC 50/60 Hz
Power Draw: (typ)			
Analog Models	10 W	10 W	46 W[9]
Ethernet Models	14 W	14 W	50 W[9]

9 Add 16 W if using VG4-SHTR-XT kit.

Surge Suppression

Protection on Video	Peak current 10 kA (Gas Tube Arrester), peak power 1000 W (10/1000 µ)
Protection on RS-232/485, Biphase	Peak current 10 A, peak power 300 W (8/20 µ)
Protection on Alarm Inputs	Peak current 17 A, peak power 300 W (8/20 µ)
Protection on Alarm Outputs	Peak current 2 A, peak power 300 W (8/20 µ)
Protection on Relay Outputs	Peak current 7.3 A, peak power 600 W (10/1000 µ)
Protection on Power Input (Dome)	Peak current 7.3 A, peak power 600 W (10/1000 µ)
Protection on Power Output (Arm Power Supply)	Peak current 21.4 A, peak power 1500 W (10/1000 µ)

Environmental

Model	In-Ceiling	Indoor Pendant	EnviroDome®
Design Rating	Plenum Rated	IP66	IP66
Operating Temp.	−10°C to 50°C (14°F to 122°F)	−10°C to 50°C (14°F to 122°F)	−40°C to 50°C (−40°F to 122°F)
Storage Temp.	−40°C to 60°C (−40°F to 140°F)	−40°C to 60°C (−40°F to 140°F)	−40°C to 60°C (−40°F to 140°F)
Humidity	0% to 90% relative, non-condensing	0% to 90% relative, non-condensing	0% to 100% relative, condensing
Protection	IP 66, IK 8 (IEC 62262)		

Miscellaneous

Sectors/Titling	16 independent sectors with 20-character titles/sector
Camera Setup/ Control	Biphase, RS-232, RS-485, Bilinx[10] (coax)
Communications Protocols	Biphase, Bilinx[10], Pelco P, and Pelco D
Pre-positions	99, each with 20-character titles
Guard Tours	Two (2) types of tours: • Recorded tours - two (2), total duration 15 minutes • Preset tour - one (1), consisting of up to 99 scenes, consecutively and (1) customized up to 99 scenes
Supported Languages	Czech, Dutch, English, French, German, Italian, Polish, Portuguese, Russian and Spanish

10 Bilinx not available on Ethernet models.

Cable Compensation

Max Distance	With Pre-comp OFF	With Pre-comp ON
RG-59/U	1000 ft (300 m)	2000 ft (600 m)
RG-6/U	1500 ft (450 m)	3000 ft (900 m)
RG-11/U	2000 ft (600 m)	4000 ft (1200 m)
Cat5/UTP (Passive receiver)	750 ft (225 m)	1500 ft (450 m)

User Connections

Power (Camera)	21-30 VAC, 50/60 Hz
Power (Heater)	21-30 VAC, 50/60 Hz
Biphase ±	Control Data
Audio Line In[11]	9 K Ohm typ, 5.5 Vp-p max
RS-232 RX/TX or RS-485 ± - optional control data (dip switch selectable)	
Video	BNC/UTP[12]
EOLR Alarm Inputs (2)	Programmable for "normally open", "normally closed", "normally open-supervised", "normally closed-supervised"
Alarm Inputs (5)	Programmable for "normally open" or "normally closed"
Relay Out (1)	Dry contact output rating: 2 A @ 30 VAC
Open Collector Outputs (3)	32VDC@150 ma max

11 With Ethernet models, the biphase ± can optionally be used as the audio line in connector.

12 Ethernet models have no UTP analog output only BNC (coax).

Mounts/Accessories

Pendant Mounts	
Arm Mounts	
Wall Arm (No Transformer)	VG4-A-PA0
Wall Arm (120/230 VAC Transformer)	VG4-A-PA1 / VG4-A-PA2
Wall Arm (120/230 VAC Transformer and Fiber Optics)	VG4-A-PA1F / VG4-A-PA2F
Optional Mounting Plates for Arm Mounts	
Corner Mounting Plate	VG4-A-9542
Mast (Pole) Mounting Plate	VG4-A-9541
Pipe Mounts	
Pipe Mount Cap	VG4-A-9543
Roof Mounts	
Roof (Parapet) Mount	VG4-A-9230
Optional Mounting Plates for Roof Mounts	
Flat Roof Adapter for Parapet Mount	LTC 9230/01
Power Supplies	
Outdoor Power Supply Box (120/230 VAC Transformer)	VG4-A-PSU1 / VG4-A-PSU2
Outdoor Power Supply Box (120/230 VAC Transformer and Fiber Optics)	VG4-A-PSU1F / VG4-A-PSU2F
Extended temp heater module extends temperature range to −60°C (−76°F) for EnviroDome® only	VG4-SHTR-XT

Fiber Optic Models

Optical Fiber Compatibility	50/125 mm, 62.5/125 mm, low loss multimode glass fiber, rated for a minimum system bandwidth of 20 MHz (video 850 nm/Control 1300 nm)
Max Distance	4 km (2.5 miles)

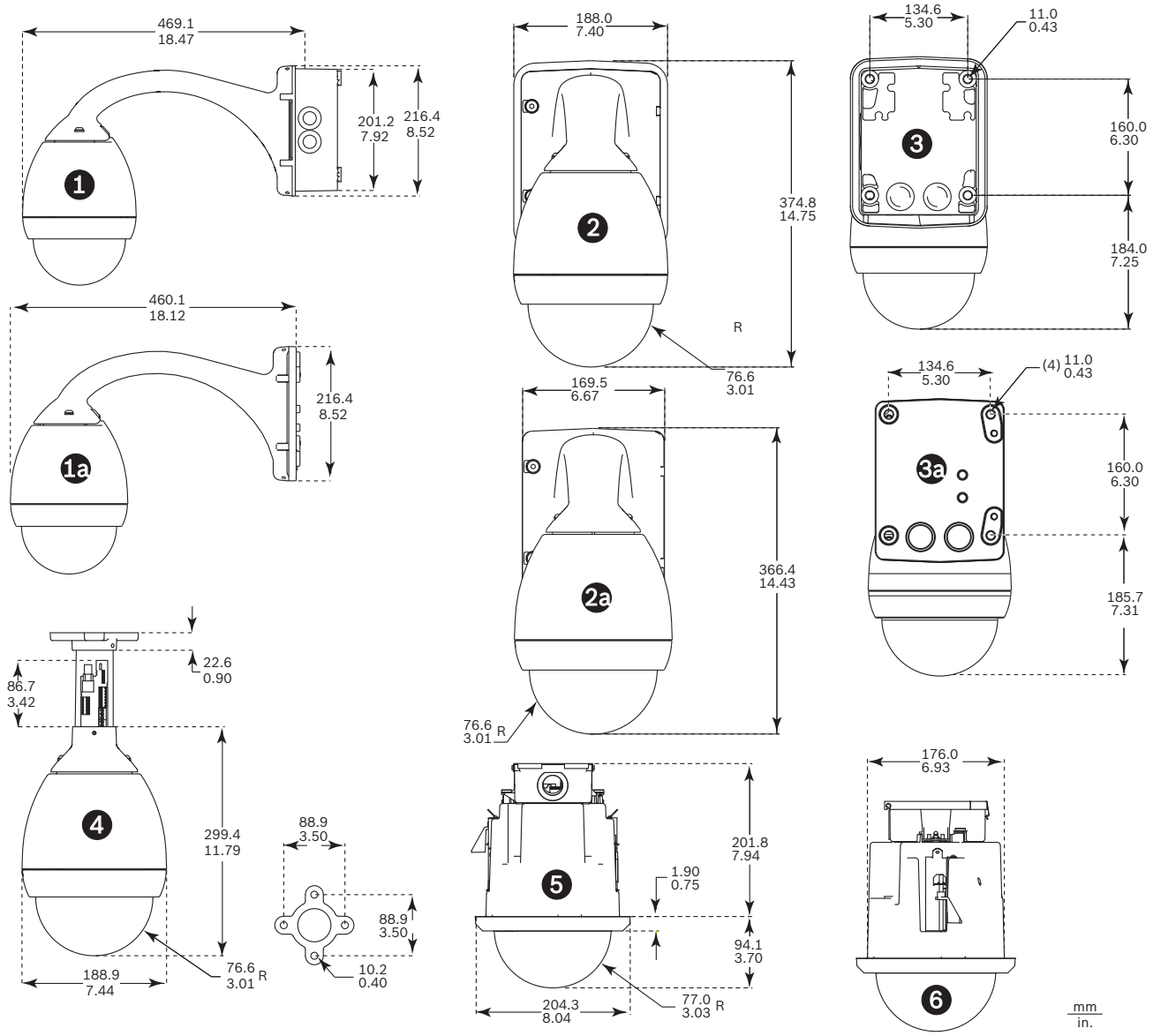

Indoor System Dimensions

Reference	Description
1	Wall Mount – Side with power supply and trim skirt removed
1a	Wall/Mast Mount – Side with VG4-ARMPLATE
2	Wall Mount – Front with power supply and trim skirt
2a	Wall Mount – Front with power supply
3	Wall Mount – Back with power supply and trim skirt
3a	Wall Mount – Back with power supply
4	Pipe Mount
5	In-ceiling Mount – Front
6	In-ceiling Mount – Side

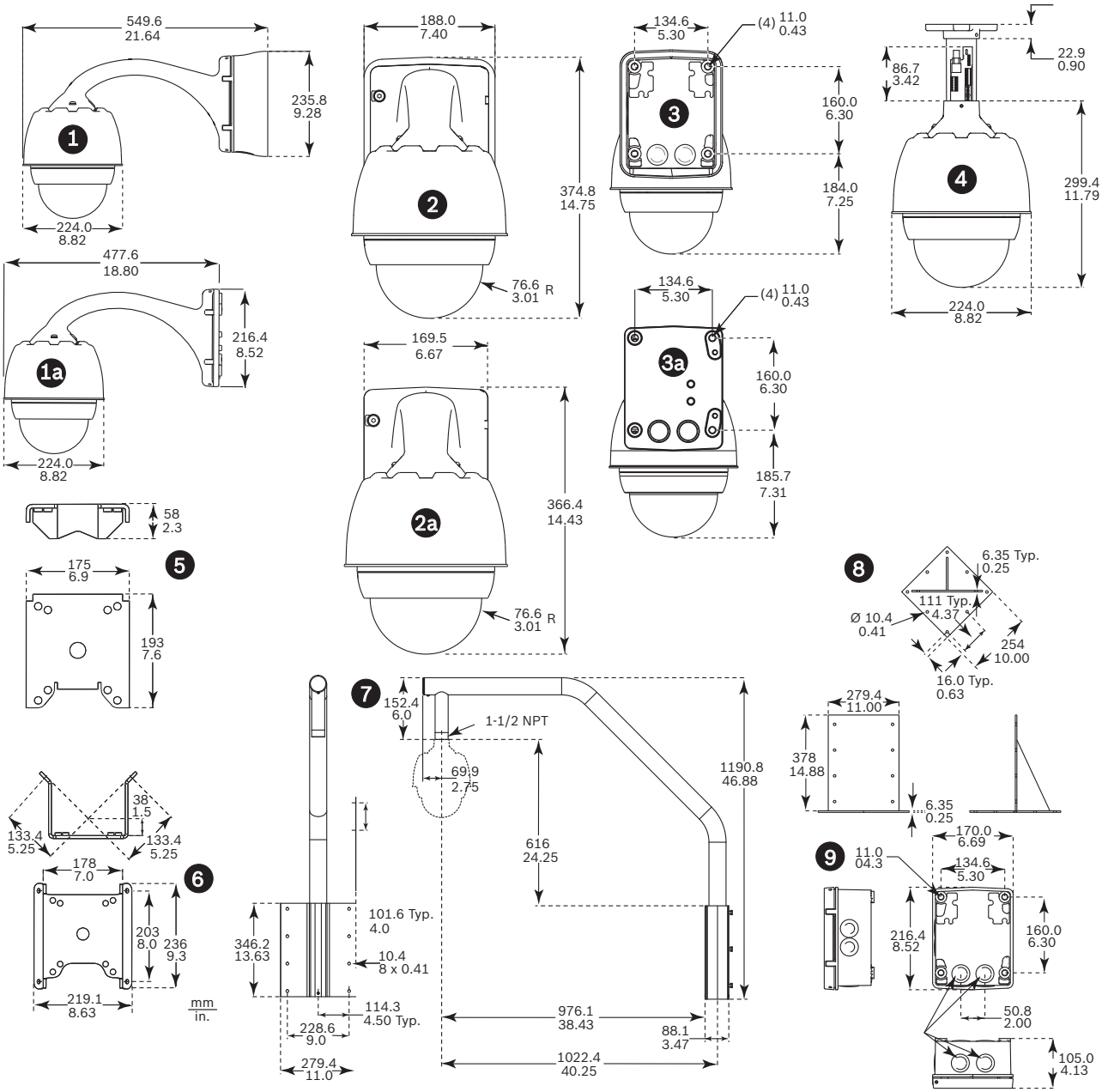

Outdoor System Dimensions

Reference	Description
1	Wall Mount – Side with power supply and trim skirt
1a	Wall/Mast Mount – Side with VG4-ARMPLATE
2	Wall Mount – Front with power supply and trim skirt
2a	Wall Mount – Front with power supply
3	Wall Mount – Back with power supply and trim skirt
3a	Wall Mount – Back with power supply
4	Pipe Mount
5	Mast Mount
6	Corner Mount
7	Roof Mount

Reference	Description
8	Roof Mount Adapter
9	Power Supply for Pipe and Roof Mounts

Ordering Information

AutoDome® 300 Series PTZ Camera System Contact your Bosch Security Systems, Inc. representative for complete ordering information.	**VG4-300**
Accessories	
VG4-MCAM-14 PTZ, 36X Day/Night, PAL, VG4 camera module	**VG4-MCAM-14**
Software Options	
VP-CFGSFT Bilinx Configuration Tool configuration software with USB adapter	**VP-CFGSFT**

Americas:
Bosch Security Systems, Inc.
130 Perinton Parkway
Fairport, New York, 14450, USA
Phone: +1 800 289 0096
Fax: +1 585 223 9180
security.sales@us.bosch.com
www.boschsecurity.us

Europe, Middle East, Africa:
Bosch Security Systems B.V.
P.O. Box 80002
5600 JB Eindhoven, The Netherlands
Phone: + 31 40 2577 284
Fax: +31 40 2577 330
emea.securitysystems@bosch.com
www.boschsecurity.com

Asia-Pacific: **Represented by**
Robert Bosch (SEA) Pte Ltd, Security Systems
11 Bishan Street 21
Singapore 573943
Phone: +65 6258 5511
Fax: +65 6571 2698
apr.securitysystems@bosch.com
www.boschsecurity.com

© Bosch Security Systems Inc. 2010 | Data subject to change without notice
T3382518027 | Cur: en-US, V26, 27 Aug 2010