ENTRANCE SIGN

THE SIGN SITS ON TOP OF A GRASSED MOUND WHICH REFLECTS THE LANDSCAPED BUNDS LOCATED AROUND THE SITE.
ITS ELEVATED POSITION GIVES UNOBSTRUCTED LINES OF SIGHT FROM THE APPROACH ROAD AND LIFTS IT CLEAR OF THE WILD FLOWER PLANTING BENEATH.

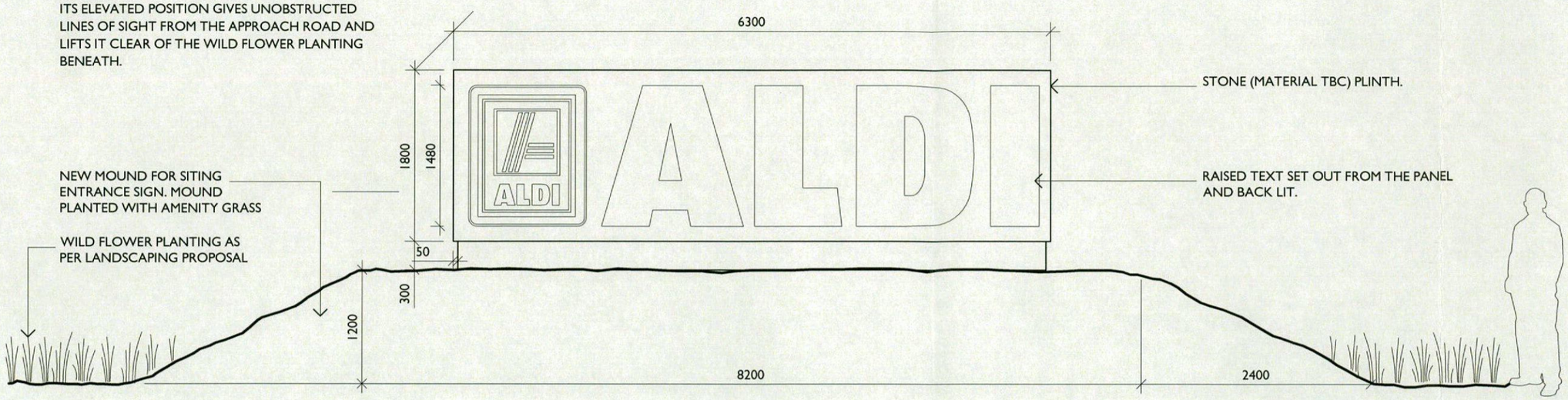

FRONT ELEVATION

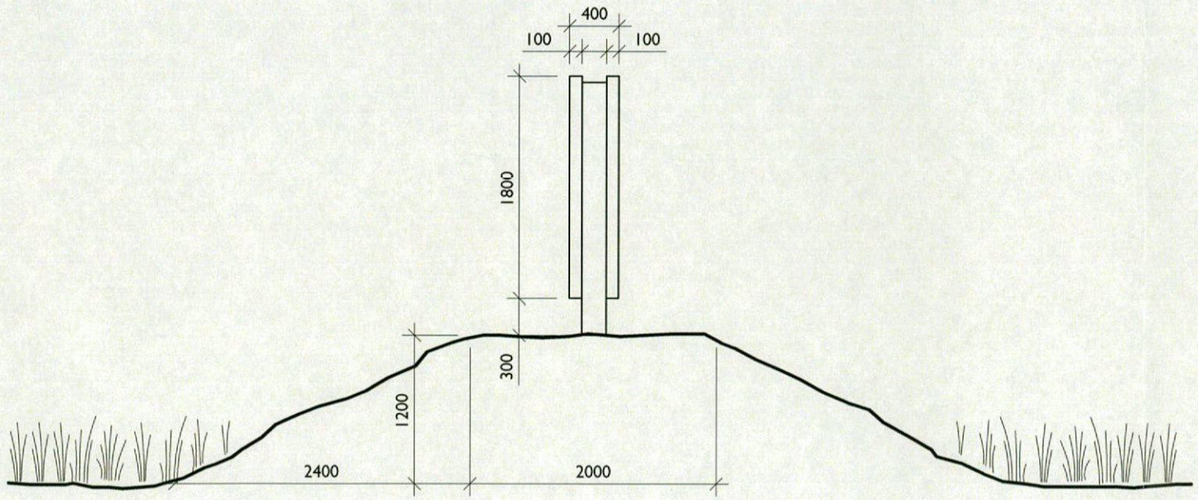

SIDE ELEVATION

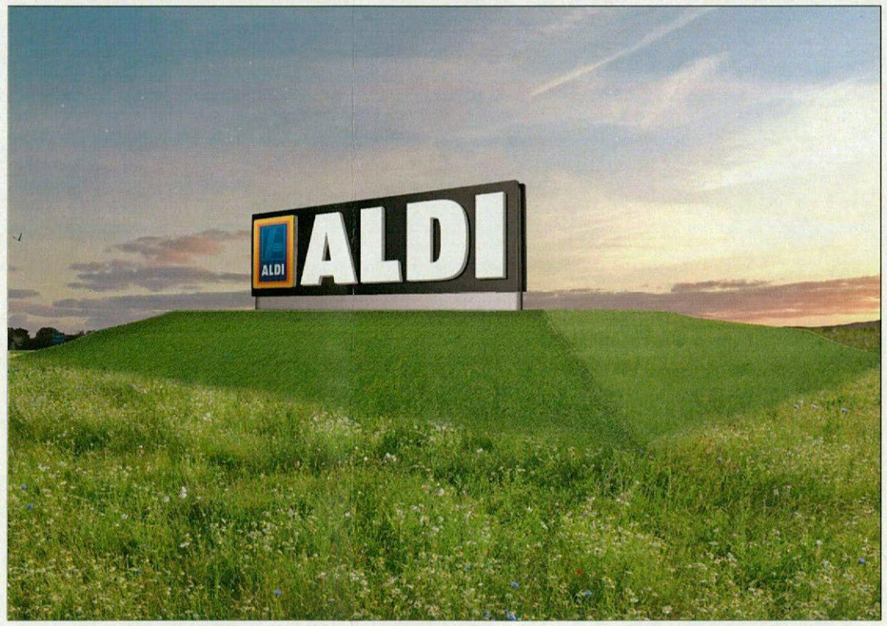

VIEW FROM ACCESS ROAD

DALKIN SCOTTON PARTNERSHIP
ARCHITECTS LIMITED
305 FORT DUNLOP FORT PARKWAY BIRMINGHAM B24 9QT
TEL - 0121 747 1943 FAX - 0121 747 1944 www.dsparchitects.com

CLIENT	ALDI STORES LTD.
PROJECT	GOLDTHORPE IND. EST. COMMERCIAL RD, GOLDTHORPE
TITLE	ENTRANCE SIGN

SCALE	1:50 @ A3	DRAWN	DJN	NORTH
DATE	30.04.13	CHECKED		
DWG No.	Y11A25-01-P510			REV

ALL DIMENSIONS TO BE VERIFIED ON SITE PRIOR TO ANY SHOP OR SITE WORKS BEING COMMENCED. ANY DISCREPANCIES TO BE REPORTED TO DALKIN SCOTTON PARTNERSHIP ARCHITECTS LIMITED BEFORE ANY WORK IS PUT IN HAND. DO NOT SCALE FROM THIS DRAWING. THIS DRAWING IS TO BE READ IN CONJUNCTION WITH RELEVANT CONSULTANTS' AND SPECIALISTS' DRAWINGS.
THIS DRAWING IS THE PROPERTY OF DALKIN SCOTTON PARTNERSHIP ARCHITECTS LIMITED. COPYRIGHT IS RESERVED BY THEM AND THE DRAWING IS ISSUED ON THE CONDITION THAT IT IS NOT COPIED, REPRODUCED, RETAINED OR DISCLOSED TO ANY UNAUTHORISED PERSON EITHER WHOLLY OR IN PART WITHOUT THE WRITTEN CONSENT OF DALKIN SCOTTON PARTNERSHIP ARCHITECTS LIMITED.

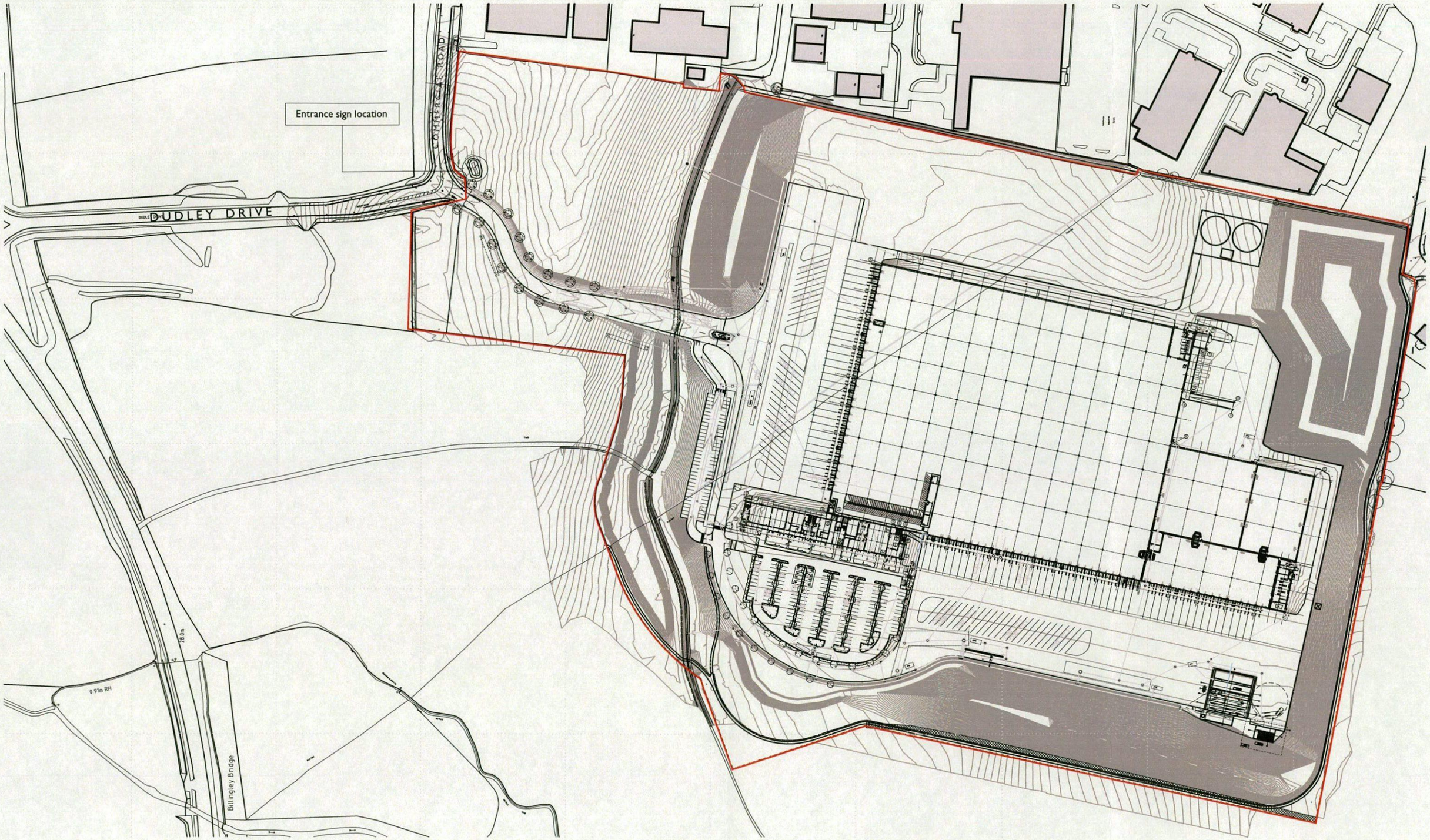

A	Revision note A1	00/00/00	ABC
Revision	Description	Date	Drawn

DALKIN SCOTTON PARTNERSHIP
ARCHITECTS LIMITED
305 FORT DUNLOP FORT PARKWAY BIRMINGHAM B24 9QT
TEL - 0121 747 1943 FAX - 0121 747 1944 www.dsparchitects.com

CLIENT ALDI STORES LTD.

PROJECT GOLDTHORPE IND. EST. COMMERCIAL RD, GOLDTHORPE

TITLE SITE LOCATION PLAN - ENTRANCE SIGN

SCALE 1:2500@ A3 DRAWN JHM NORTH

DATE 30.04.13 CHECKED SB

DWG No. Y11A25-01-P011 REV

ALL DIMENSIONS TO BE VERIFIED ON SITE PRIOR TO ANY SHOP OR SITE WORKS BEING COMMENCED. ANY DISCREPANCIES TO BE REPORTED TO DALKIN SCOTTON PARTNERSHIP ARCHITECTS LIMITED BEFORE ANY WORK IS PUT IN HAND. DO NOT SCALE FROM THIS DRAWING. THIS DRAWING IS TO BE READ IN CONJUNCTION WITH RELEVANT CONSULTANTS' AND SPECIALISTS' DRAWINGS.
THIS DRAWING IS THE PROPERTY OF DALKIN SCOTTON PARTNERSHIP ARCHITECTS LIMITED. COPYRIGHT IS RESERVED BY THEM AND THE DRAWING IS ISSUED ON THE CONDITION THAT IT IS NOT COPIED, REPRODUCED, RETAINED OR DISCLOSED TO ANY UNAUTHORISED PERSON EITHER WHOLLY OR IN PART WITHOUT THE WRITTEN CONSENT OF DALKIN SCOTTON PARTNERSHIP ARCHITECTS LIMITED.